KENWOOD

HI/FI STEREO COMPONENTS

SERVICE MANUAL

KR-4070
(KR-4770)

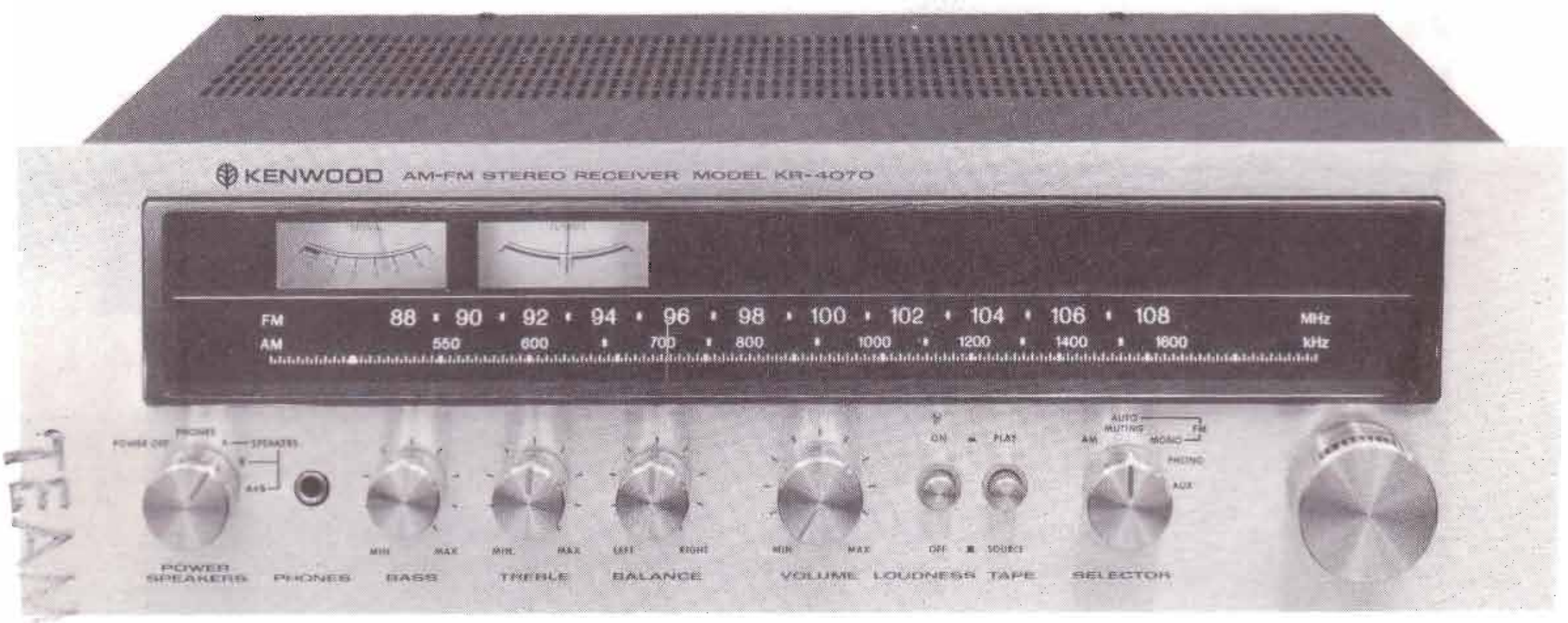

AM-FM STEREO RECEIVER

CONTENTS

EXTERNAL VIEW 3
INTERNAL VIEW 4
DIAL CORD STRINGING 4
DISASSEMBLY FOR REPAIR 5
CIRCUIT DESCRIPTION 7
DESTINATIONS' PARTS LIST 12
PARTS LIST 13
PC BOARD
TUNER (X05-1470-10) 16
AUDIO (X09-1220-10) 17
SEMICONDUCTOR SUBSTITUTIONS 18
ADJUSTMENT 19
SCHEMATIC DIAGRAM 22
SPECIFICATIONS 23

Products for PX (U type) are provided with Cabinet as photo.

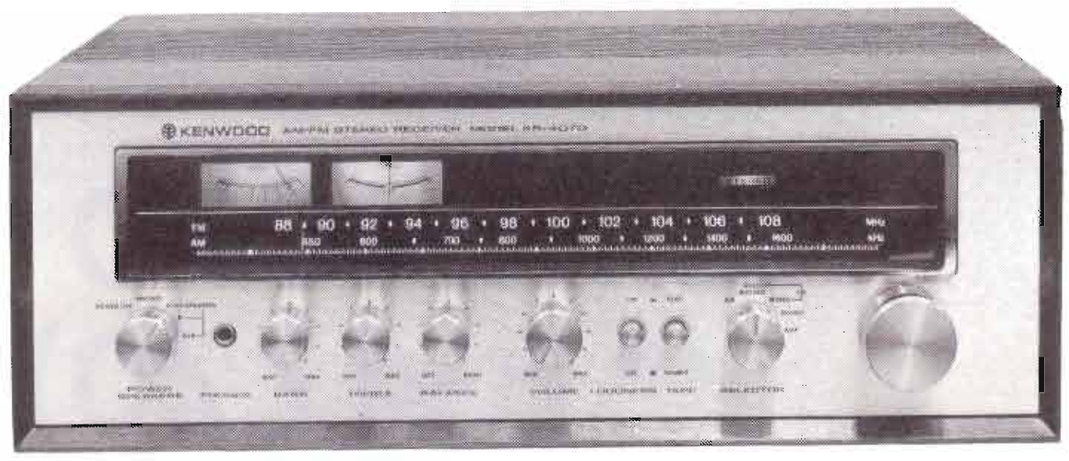

Note 1:
The products are subject to modification in components and circuits in different countries and regions. This is because each product must be used under the best condition. This manual provides information of modification based on the standard in the U.S., for the convenience of ordering associated components and parts.

U.S.A.	K
Canada	P
PX	U
Australia	X
Europe	W
England	T
Scandinavia	L
Other areas	M
Audio Club	M_2 (KR-4770)

Note 2:
Symbol ☆ in parts list means the new parts.

EXTERNAL VIEW

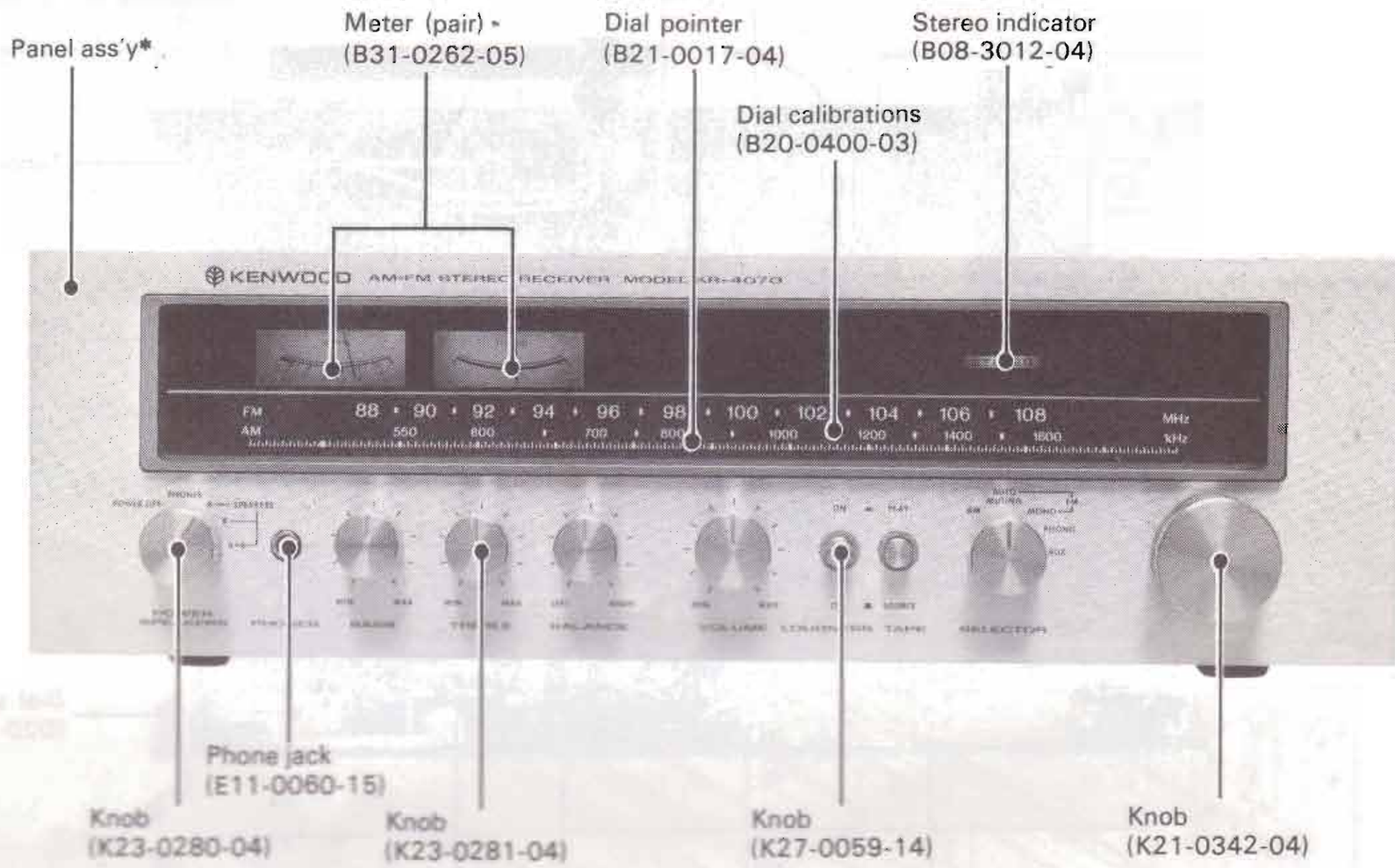

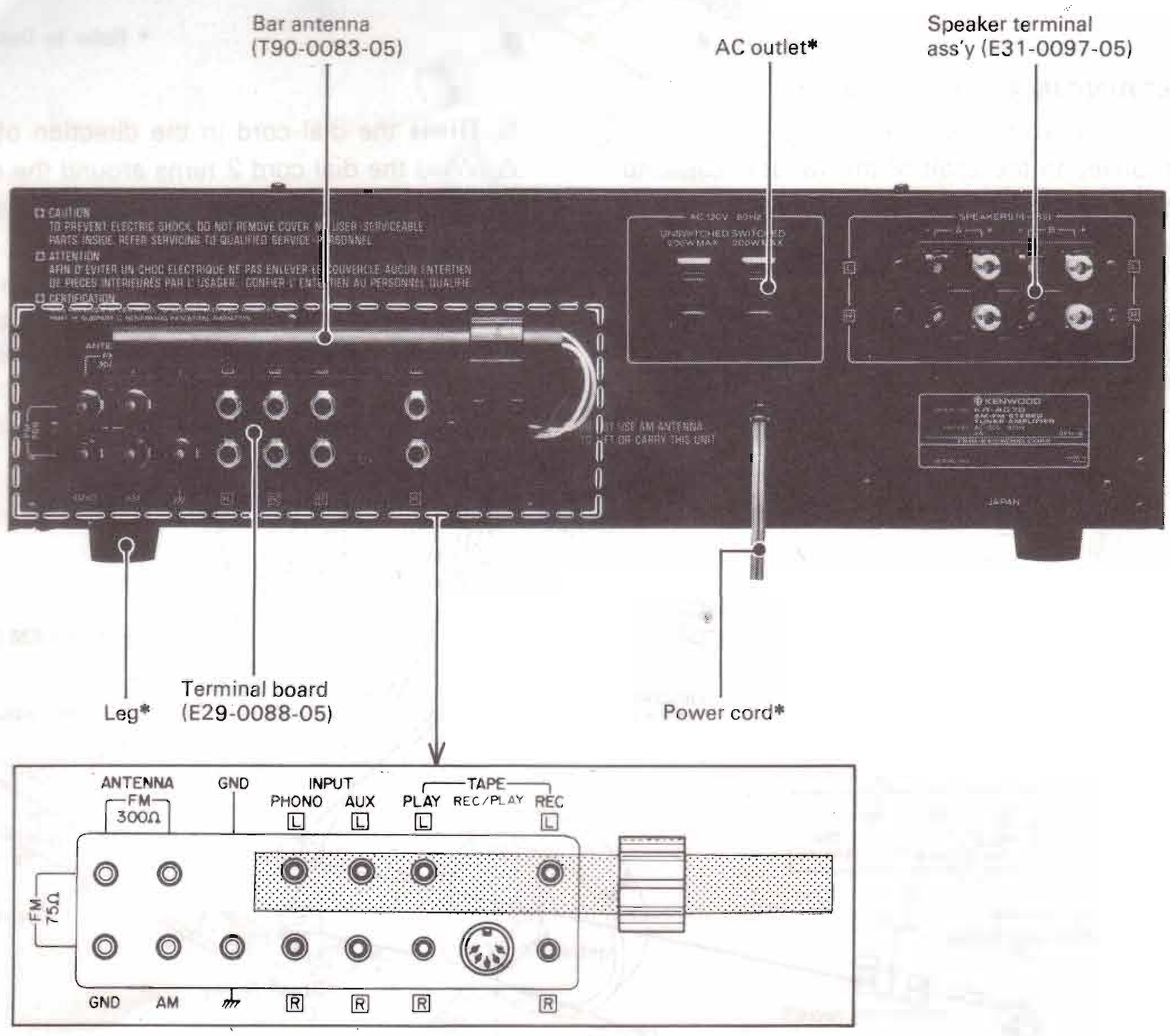

* Refer to Destinations' Parts List.

INTERNAL VIEW/DIAL CORD STRINGING

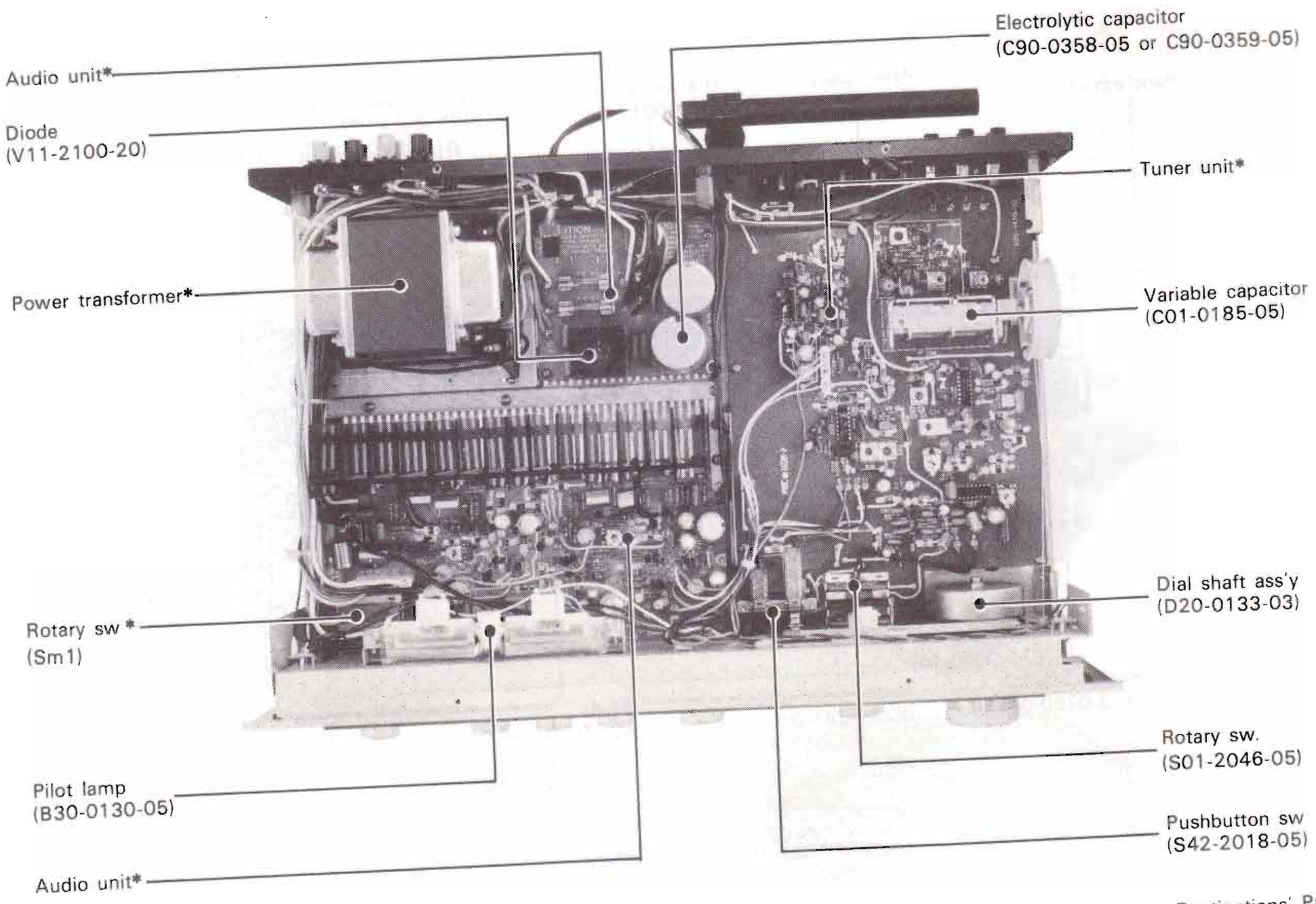

* Refer to Destinations' Parts List.

DIAL CORD STRINGING

1. Fully close the variable capacitor.
2. Fix the dial pulley to the shaft of the variable capacitor using 2 screws as shown.
3. Tie the dial cord to the dial spring leaving a 10 cm length part of it.
4. Hook the dial spring on the boss, and wind it one and half turn counterclockwise around the dial pulley.
5. Dress the dial cord in the direction of "1" to "6".
6. Wind the dial cord 2 turns around the dial shaft starting from its lower side, then dress it in the direction of "7" to "8".
7. Tie the end of it tightly with remaining a 10 cm dial cord.
8. Remove the dial spring from the boss.
9. Mount the dial pointer as shown in the illustration.

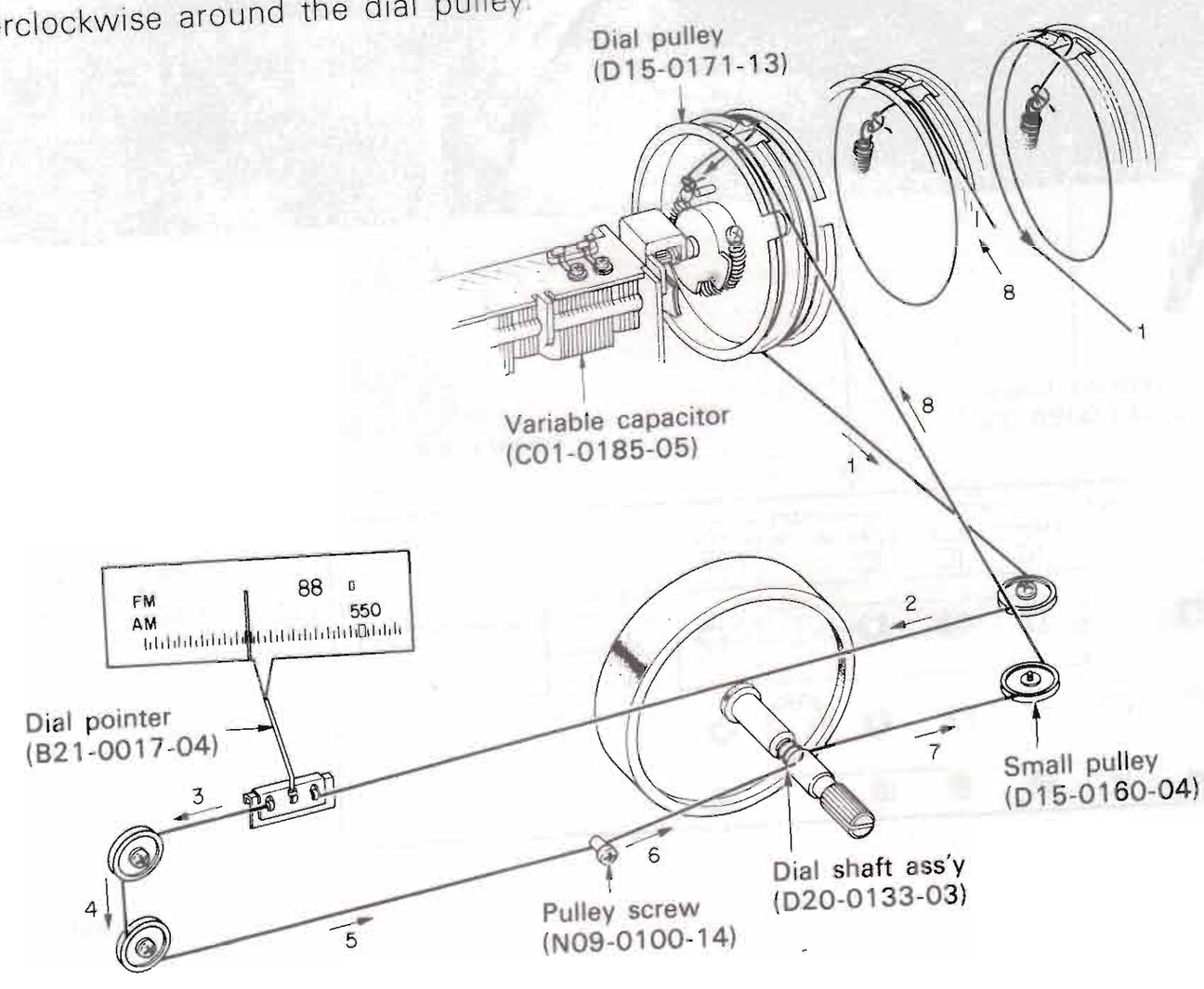

DISASSEMBLY FOR REPAIR

REMOVING PANEL ASS'Y

1. Remove 10 screws from the top and side of the case. ①
2. Remove the case. ②
3. Pull knob from shaft. ③
4. Remove the screw from the panel ass'y. ④
5. Remove the nut of the speaker and the selector switch from panel ass'y. ⑤
6. Remove the panel ass'y. ⑥

NOTE:
M3 × 6 (Bi-tap): N89-3006-45
M3 × 6 (Br-tap): N87-3006-46
M3 × 8 (Br-tap): N87-3008-46
M3 × 10 (Bi-tap): N89-3010-45

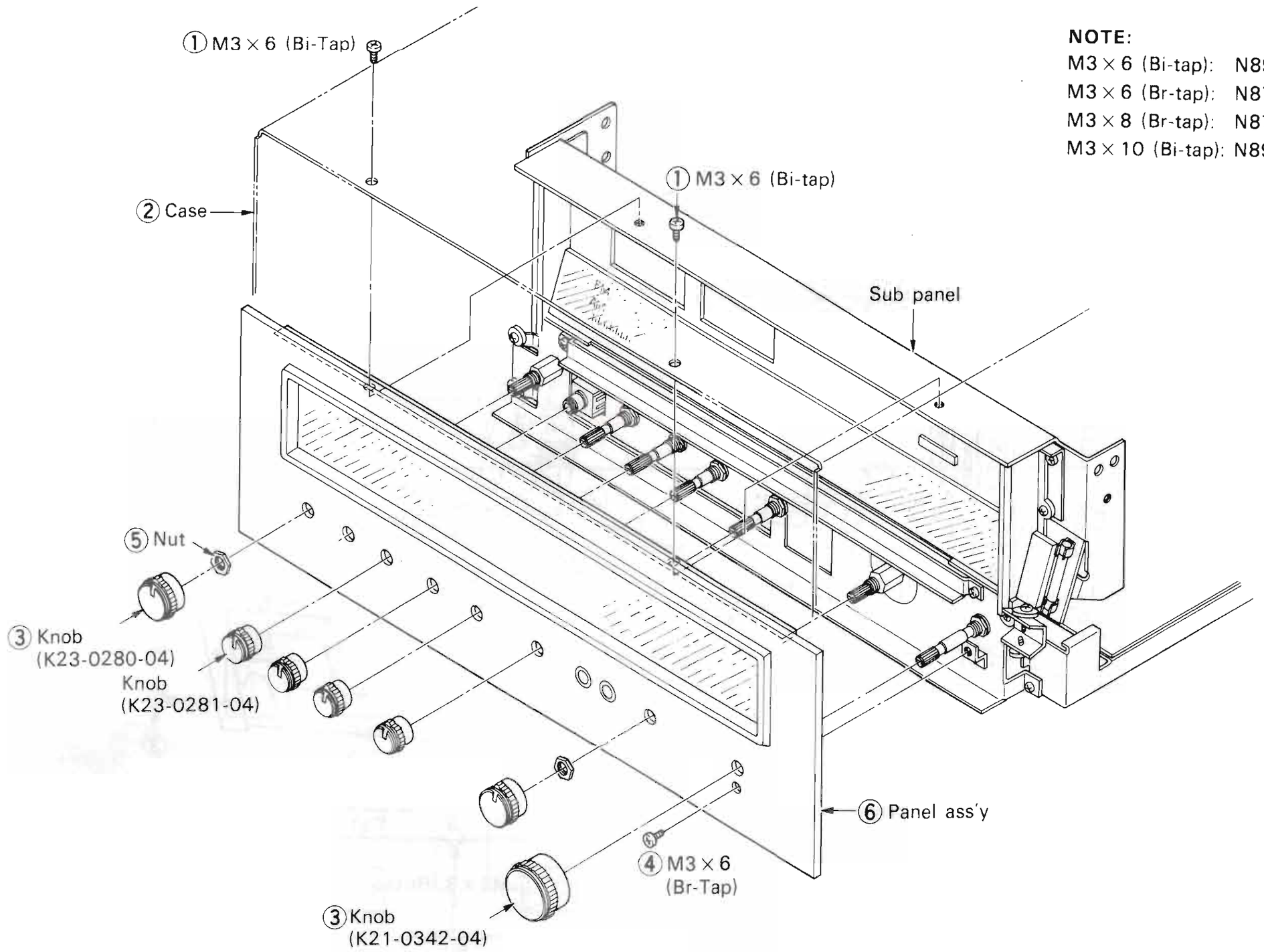

REMOVING AUDIO BLOCK

1. Remove 3 screws from the sub panel. ②
2. Remove the boss from the sub panel. ③
3. Remove the 4 screws from the framework. ④

① ~ ④ = In case of removing Audio block.
①, ⑤ = In case of removing heat sink.

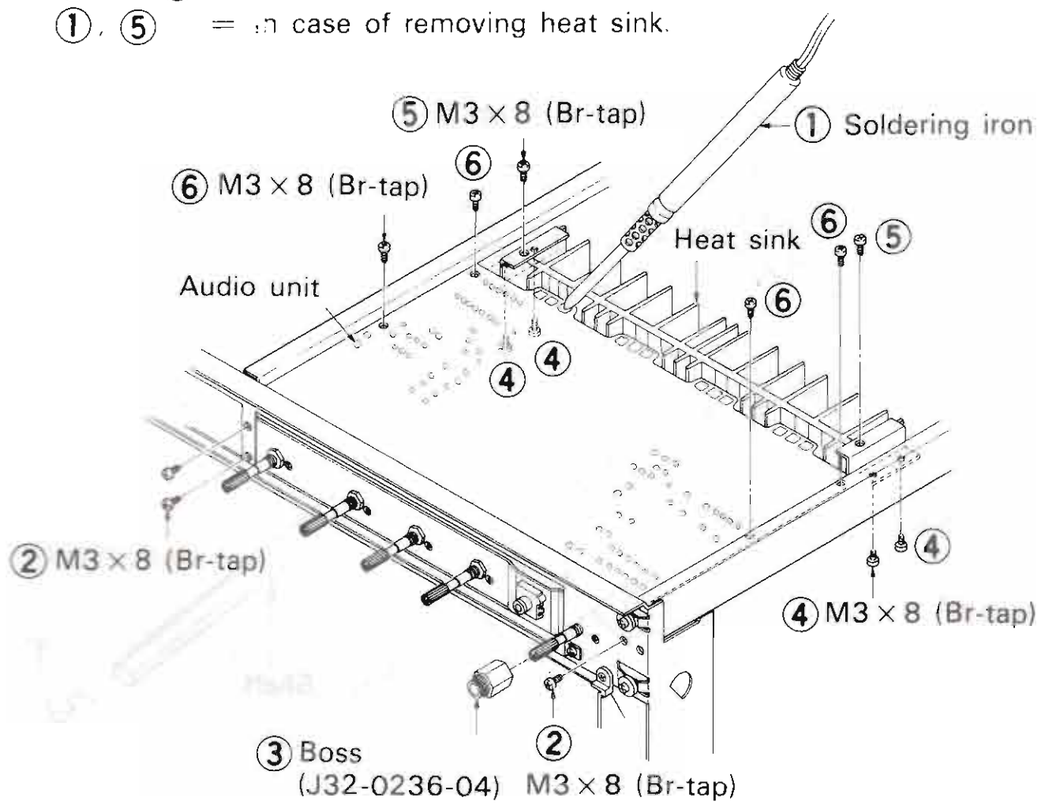

REMOVING POWER TRANSISTOR

1. Undolder the lead of power transistor and thermistor. ①
2. Remove 2 screws from heat sink mounting hardware. ⑤
3. Remove the heat sink.

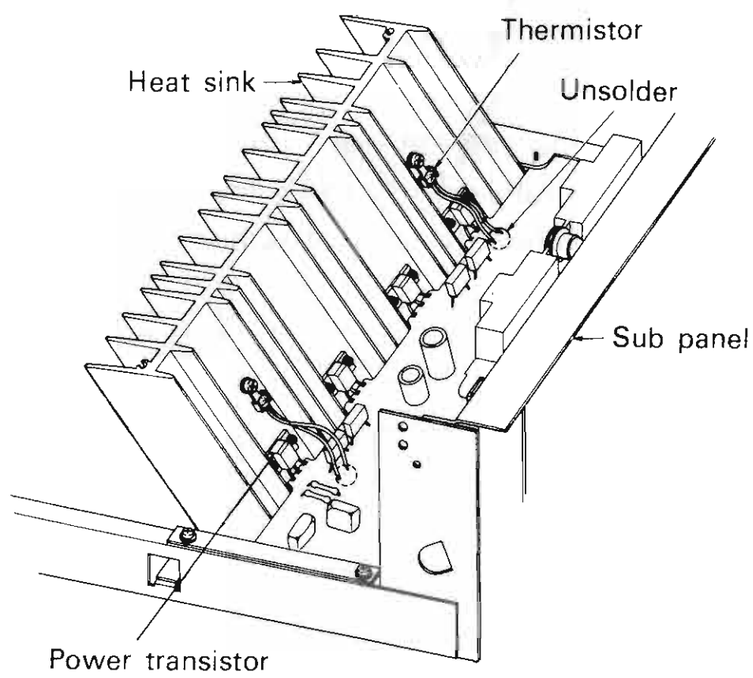

DISASSEMBLY FOR REPAIR

REMOVING TUNER BLOCK

1. Pull out the mini-connector from Pin ass'y. ①
2. Remove the dial pulley from variable capacitor. ②
   NOTE: Make sure the string of dial pulley is not raved.
3. Remove the 9 black screws from the rear panel and separate the rear panel from the framework. ③
4. Remove the boss from the subpanel. ④
5. Remove 5 screws from the PC board. ⑤
   If removing the terminal board, remove 2 screws from PC board. ⑥

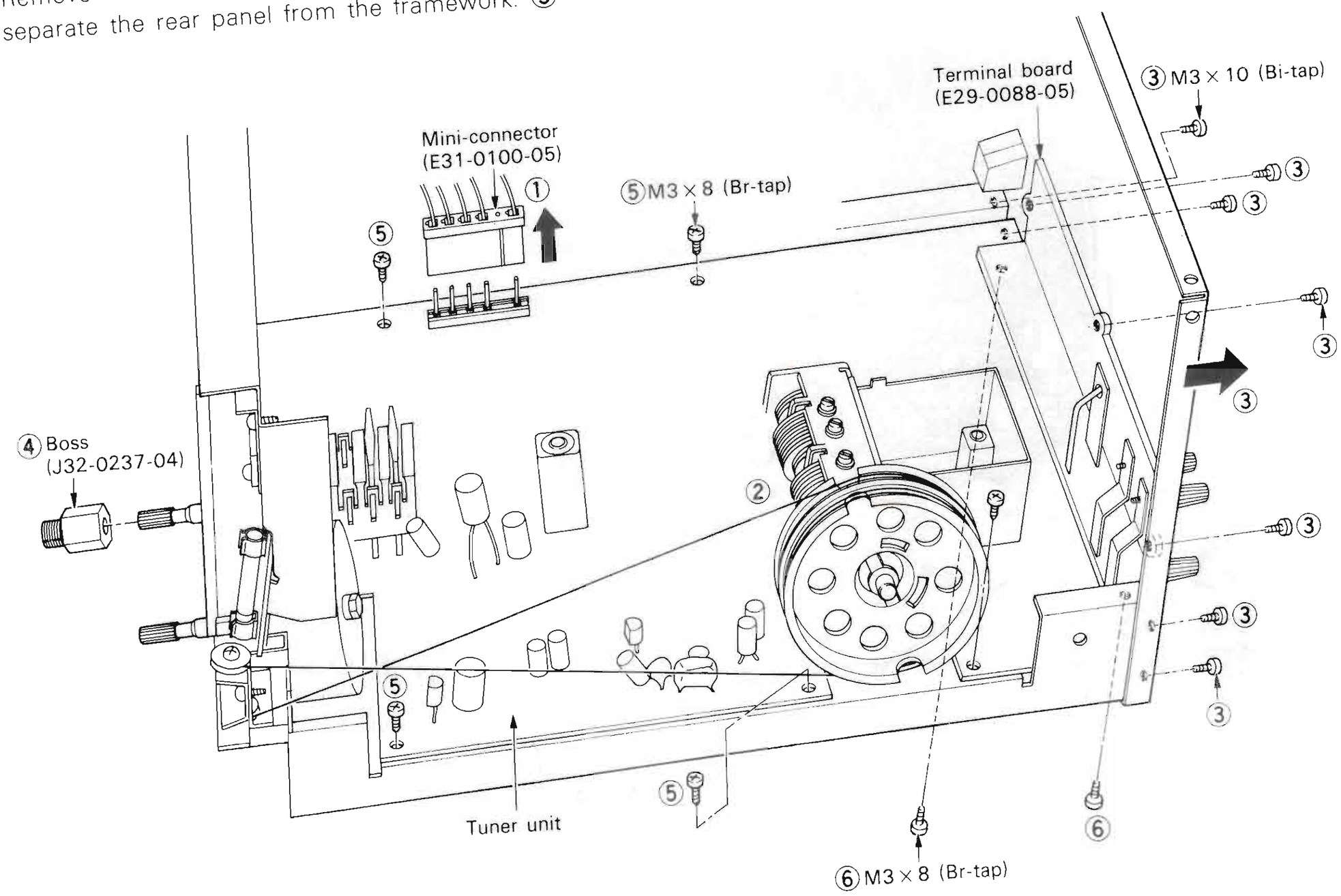

REPLACING THE ROTARY WAFER

Speaker switch and selector switch are employed Rotary switch on each unit.
In case of the wafer being poor contact, it is easy to replace the defective wafer as the following.

1. Pull out the rotary switch shaft. ①
2. Loose the hook fixing the wafer. ②
3. Pull out the defective wafer and replace with new one. ③

NOTE: Before repalcement, turn the shaft of the new and the old rotary switch to the fully counterclockwise and unsolder the legs of water from a PC board.

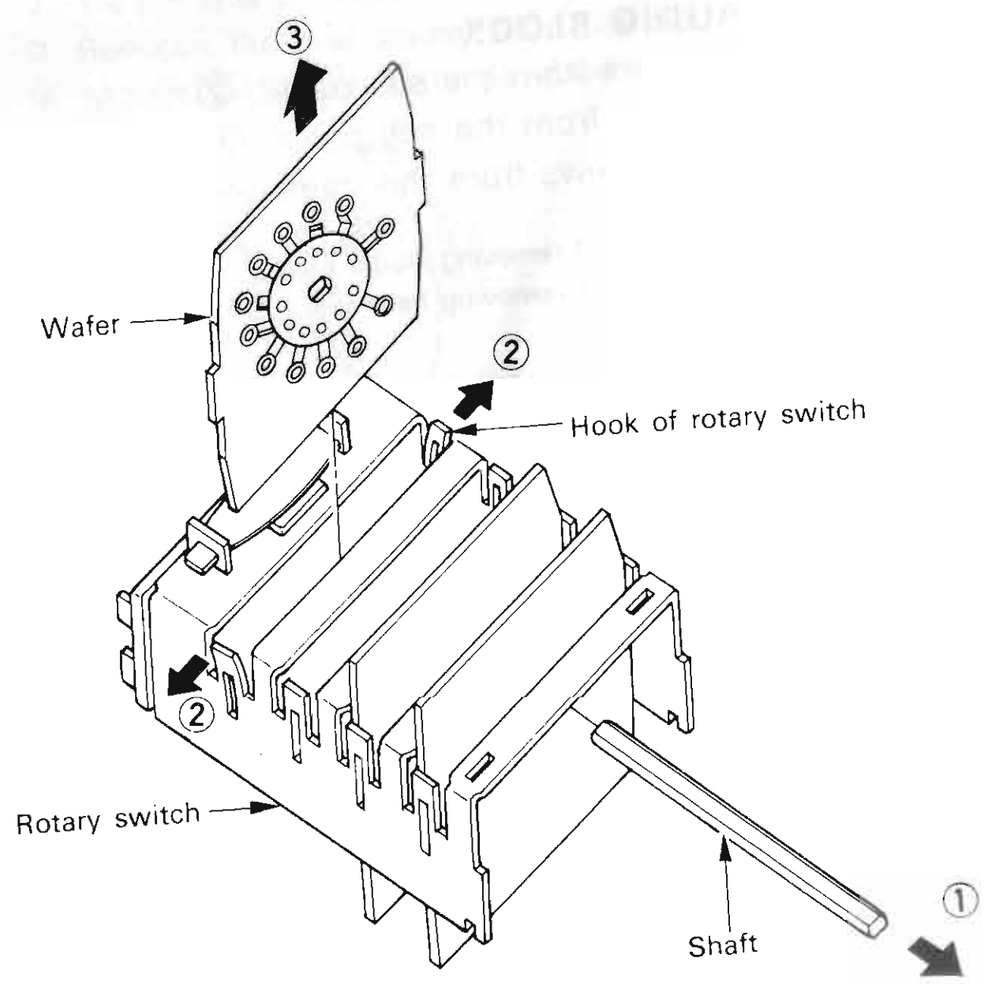

DISASSEMBLY FOR REPAIR/CIRCUIT DESCRIPTION

REPAIRING THE PRINTED RESISTOR

When printed resistor illustrated as in the schematic diagram is defective. Take the following method.

1. Scratch the surface of printed resistor on the PC board ①
2. Solder the resistor, having the same value as the printed resistor, on the rear of PC board.②

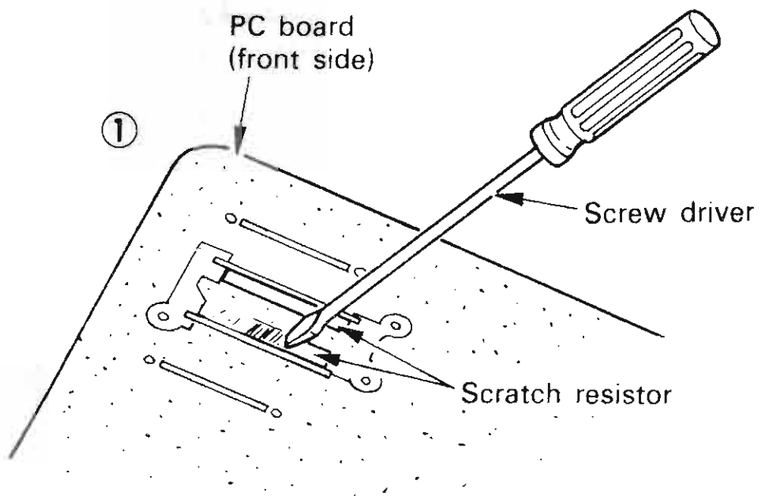

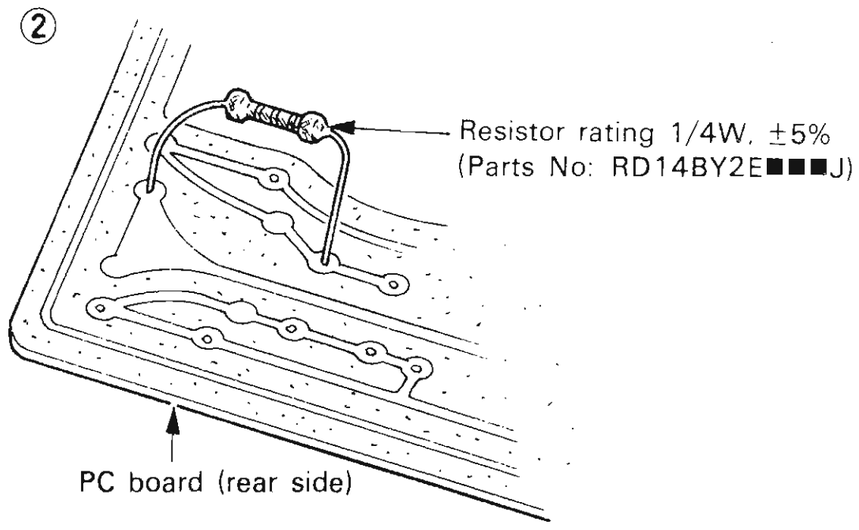

CIRCUIT DESCRIPTION

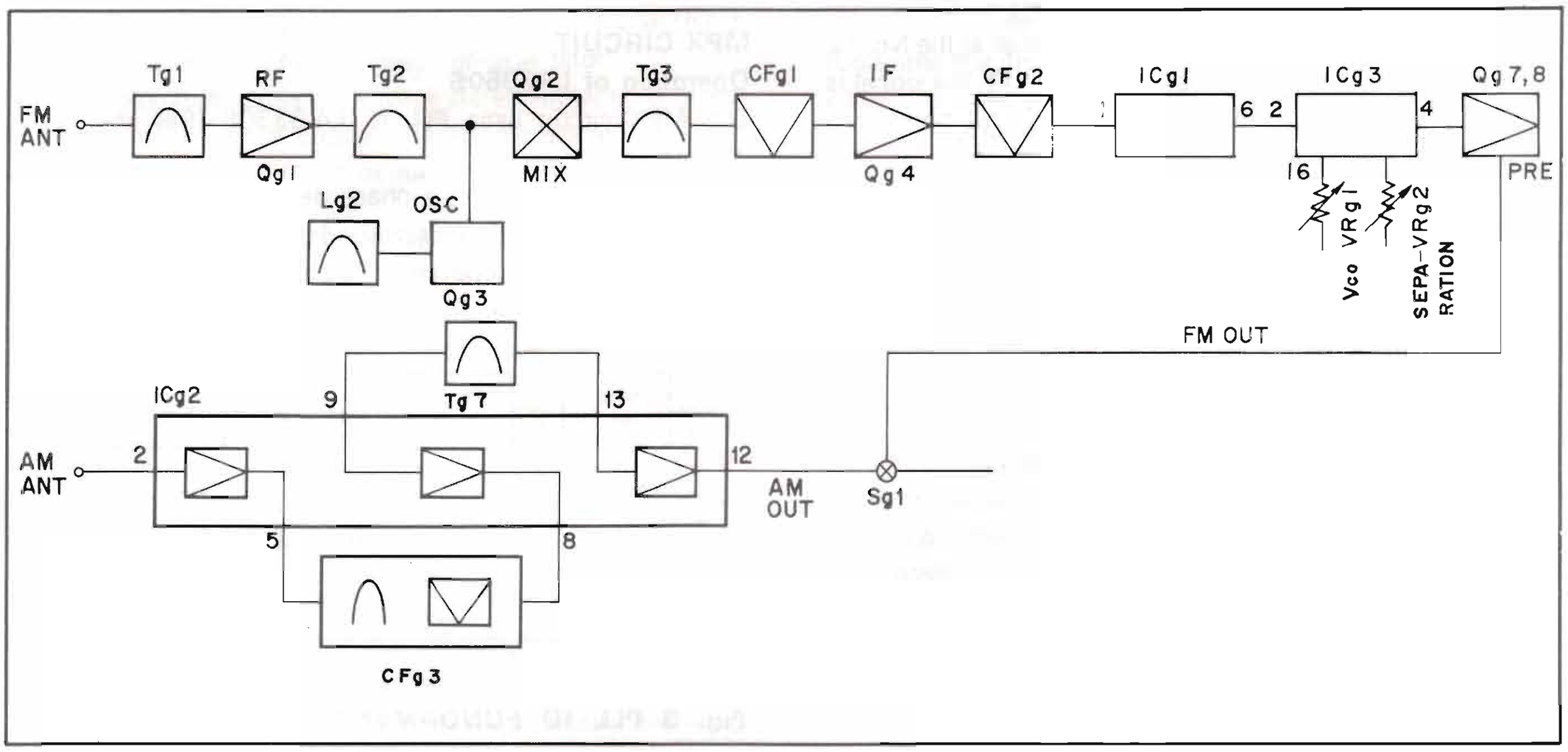

TUNER (X05-1470-10)

FM TUNER

FM signal is amplified by Qg 1 and mixed at Qg2 with the local oscillator output from Qg3 so as to be converted to 10.7 MHz IF signal. The IF signal selected at Tg3, CFg1, Qg4 and CFg2 is fed to ICg1.

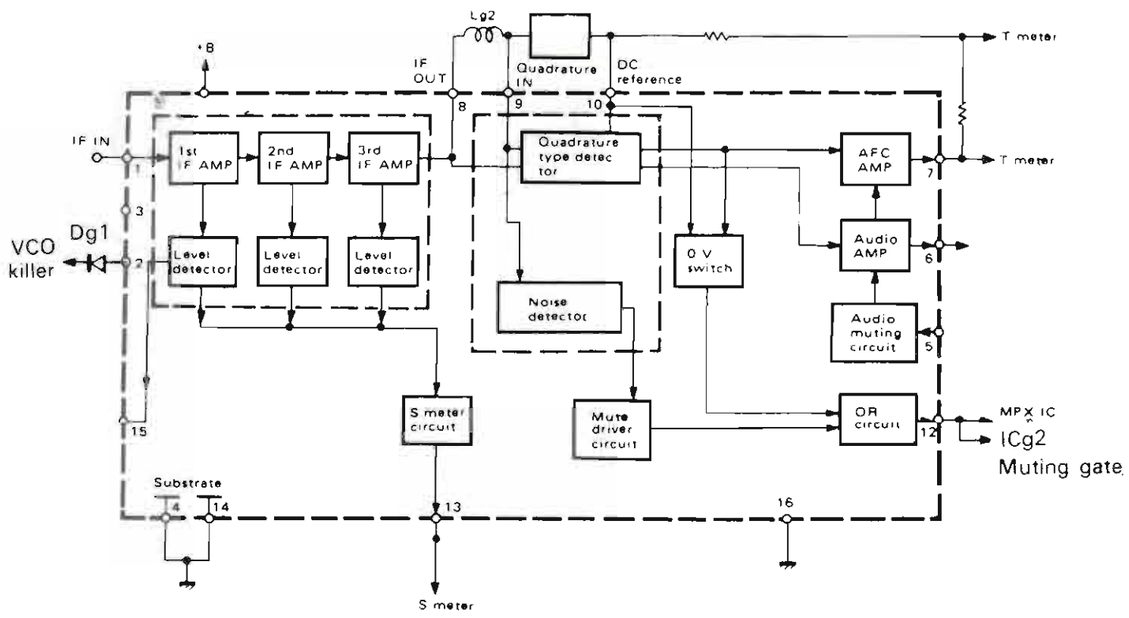

Fig. 1 HA1137W BLOCK DIAGRAM

CIRCUIT DESCRIPTION

The IF circuit employs IC HA1137W in which quadrature detector circuit, muting circuit, and meter circuit are incorporated. (See block diagram.)
Quadrature detection is a sort of phase detection. A signal from the third IF AMP is directly applied to one side of input circuits of the multiplier of quadrature detector, and another signal is applied to the other side through the phase shifter of Lg3. The variable in phase difference obtained from these two signals is utilized for detection.

AUXILIARY CIRCUITS

S-Meter (Signal meter) circuit

The S-meter output is obtained directly from No. 13 pin of ICb2.

T-meter (Tuning meter) circuit

When a tuned frequency is drift from its center, a voltage is produced between the No. 7 pin and No. 10 pin of ICg1. This voltage is used to deflect the meter pointer.
A voltage is applied to the No. 5 pin of ICg1 to operate the audio muting amplifier ICg1. Since the voltage at the No. 12 pin of ICg1 is applied to the No. 10 pin of ICg3, the signal is forcedly changed into a monaural signal to prevent the stereo lamp being mis-operated.

FM MUTING CIRCUIT

Detection procedure

Intensity of input level is detected from a position where a signal equivalent to the quadrature detection input is obtainable (NOISE DETECTOR). The obtained signal is supplied to the MUTE DRIVER CIRCUIT. On the other hand, DC output (discrimination curve) of the quadrature detector is fed to the 0V SWITCH and output is generated as shown in Fig. 2-(a). This output and above-mentioned input level detecting signal are put in the OR CIRCUIT, thus generating an OR output as shown in Fig. 2-(c).
Namely, when the input signal is weak or deviates from the discrimination curve of the FM detector, operating voltage for muting is generated exceeding the muting level. (The muting start level corresponds to the antenna input below 8μV.)

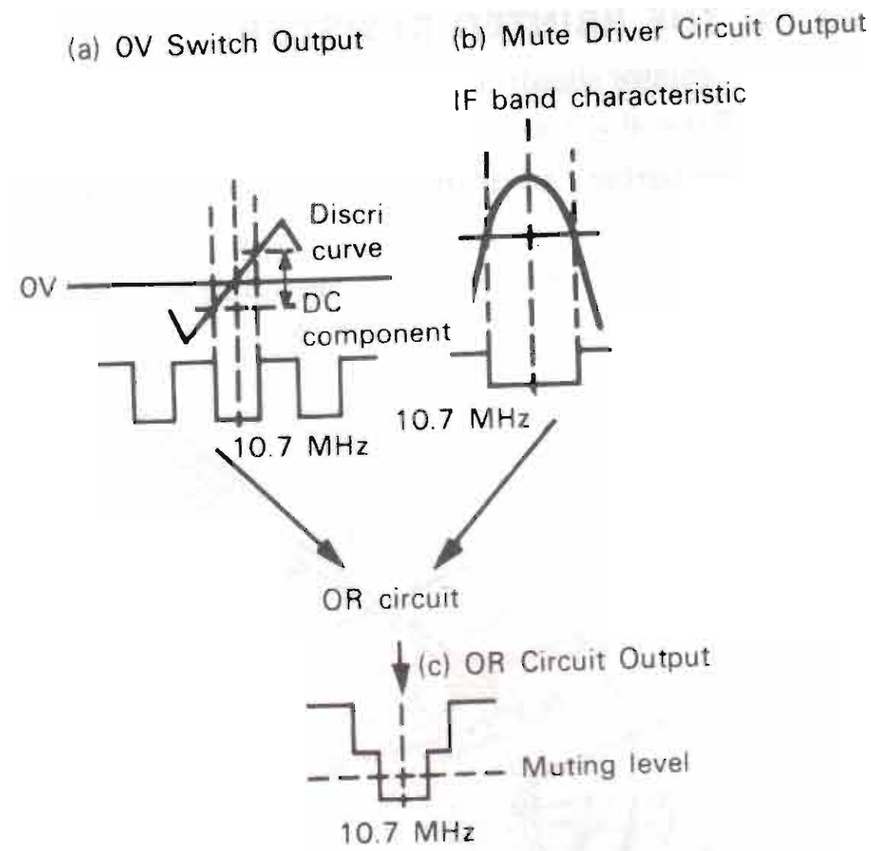

Fig. 2 HA1137W MUTING DETECTION

MPX CIRCUIT

Operation of LA3350S

The MPX circuit uses PLL IC LA-3350S (See the block diagram).
The PLL is composed of a phase detector (PD), a low pass filter (LPF) and a voltage controlled oscillator (VCO), forming a electronic closed loop servo system.

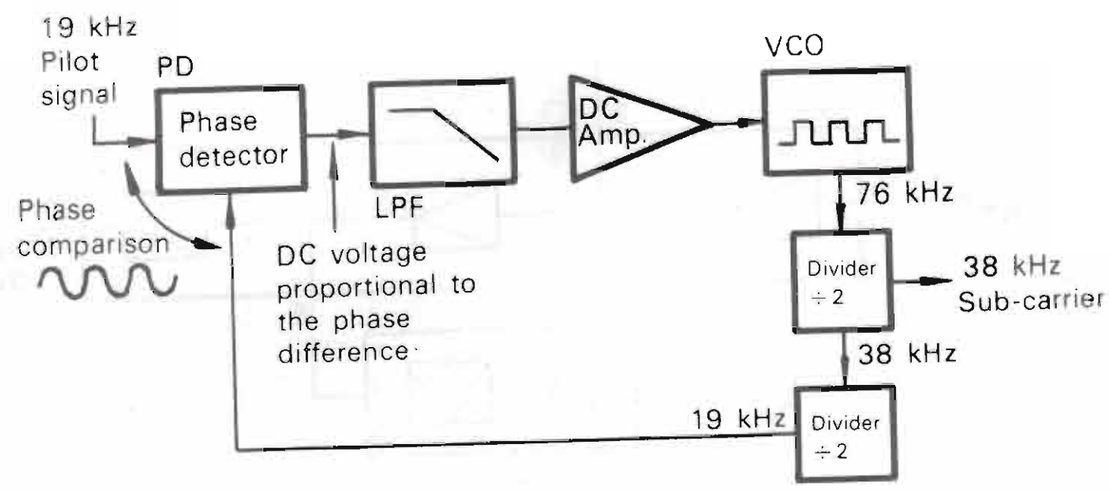

Fig. 3 PLL IC FUNDAMENTAL BLOCK DIAGRAM

As shown in the figure, a 76 kHz square wave signal is produced in VCO, which is divided into 19 kHz through the 2-step divider and its phase is compared with that of the 19 kHz pilot signal by PD.
If there is a difference between these phases, a DC voltage corresponding to the phase difference is developed and is fed to VCO through LPF and DC amplifier, as a DC control voltage. With this DC voltage, VCO is controlled so that the output is in phase with the pilot signal.
Thus, a 38 kHz sub-carrier phase locked in the 19 kHz pilot signal is obtained to prevent the deterioration of separation due to phase deviation.

CIRCUIT DESCRIPTION

Description of block diagram

The stereo composite signal is fed to the terminal 2. It is partly applied to the synchronizing detector through the audio amplifier and to PD-1 through Cg48. When the control voltage is absent, VCO is set in a free run oscillating state at about 76 kHz. The output of VCO is divided into 19 kHz by the dividers DIV-1 and DIV-2, and its phase is compared with the phase of the 19 kHz pilot signal by PD-1. In practical application, a multiplier is used as a phase detector to produce an output proportional to the product of 2 input signals (19 kHz pilot signal and 19 kHz VCO). This output, after its unwanted component is removed by LPF is amplified by the DC amplifier and is fed to VCO as a control voltage. With this voltage, VCO oscillates a signal 4 times the frequency of the pilot signal.

The 38 kHz signal obtained by VCO is fed, as a switching signal, to the synchronizing detector circuit through the stereo auto switch. Since the 38 kHz signal is an ideal square wave signal, it does not include even number harmonics and it will not produce a beat with SCA signal (67 ± 7 kHz), thus eliminating the need for SCA filter.

When a monaural signal or a weak stereo signal is received, the stereo auto switch cuts off the 38 kHz signal to prevent the deterioration of S/N of demodulated audio signal.

Functions of stereo auto switch

The output of DIV-1 is partly fed to DIV-3 and is divided into 19 kHz. It is then fed to the one side of the input of PD-2. The 19 kHz signal of DIV-3 is phase locked by the 19 kHz pilot signal during stereo reception, so that a DC voltage proportional to the amplitude of the pilot signal is developed in the PD output.

In monaural broadcase, there is no pilot signal and therefore no voltage is developed. Also, in stereo broadcase, if the signal is weak, it does not reach the trigger level so the following functions are not effected.

The DC signal is fed to the trigger circuit and when its level is above the predetermined threshold, the stereo switch turns on to send the 38 kHz switching signal to the synchronizing detector and the stereo lamp lights.

VCO killer

When a +B voltage is applied to the front end (FM position), the diode Dg4 is reversely biased and thus the No. 16 pin is disconnected from the ground. However, in the case of the mode other than FM, the +B voltage disappears, so the No. 16 is grounded through the diode and resistor to prevent VCO being operated, thus the S/N is not degraded.

Similarly, when the No. 2 pin of ICg1 is grounded, the differential amplifier is unbalanced. This reduces the output of the No. 6 pin so that the meter is not operated.

AM UNIT

The RF signal from the bar antenna is fed to the No. 2 pin of ICg2 where it is amplified. This signal is fed from the No. 4 pin and is applied to the No. 7 pin and the tuning circuit with a variable capacitor. The amplified signal is mixed with the signal from the local oscillator composed of Tg6 and a variable capacitor and is converted into IF output by CFg3 so as to be fed to ICg2 where it is amplified. The signal amplified passes through the IFT of Tg7 and is then fed to ICg2, and the detected output is taken out of the No. 12 pin, while the AM S-meter output is taken out of No. 15 pin of ICg2.

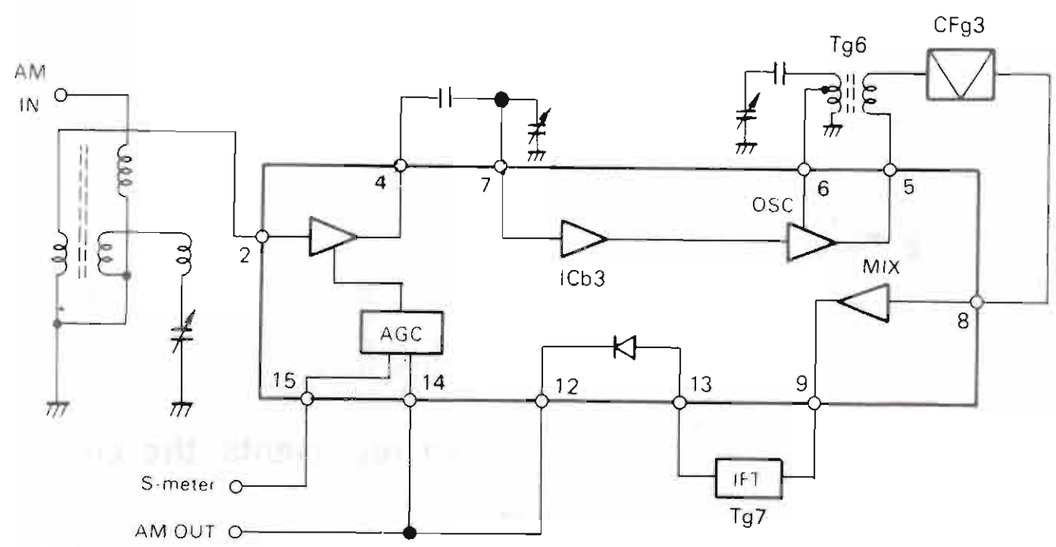

Fig. 5 AM BLOCK DIAGRAM

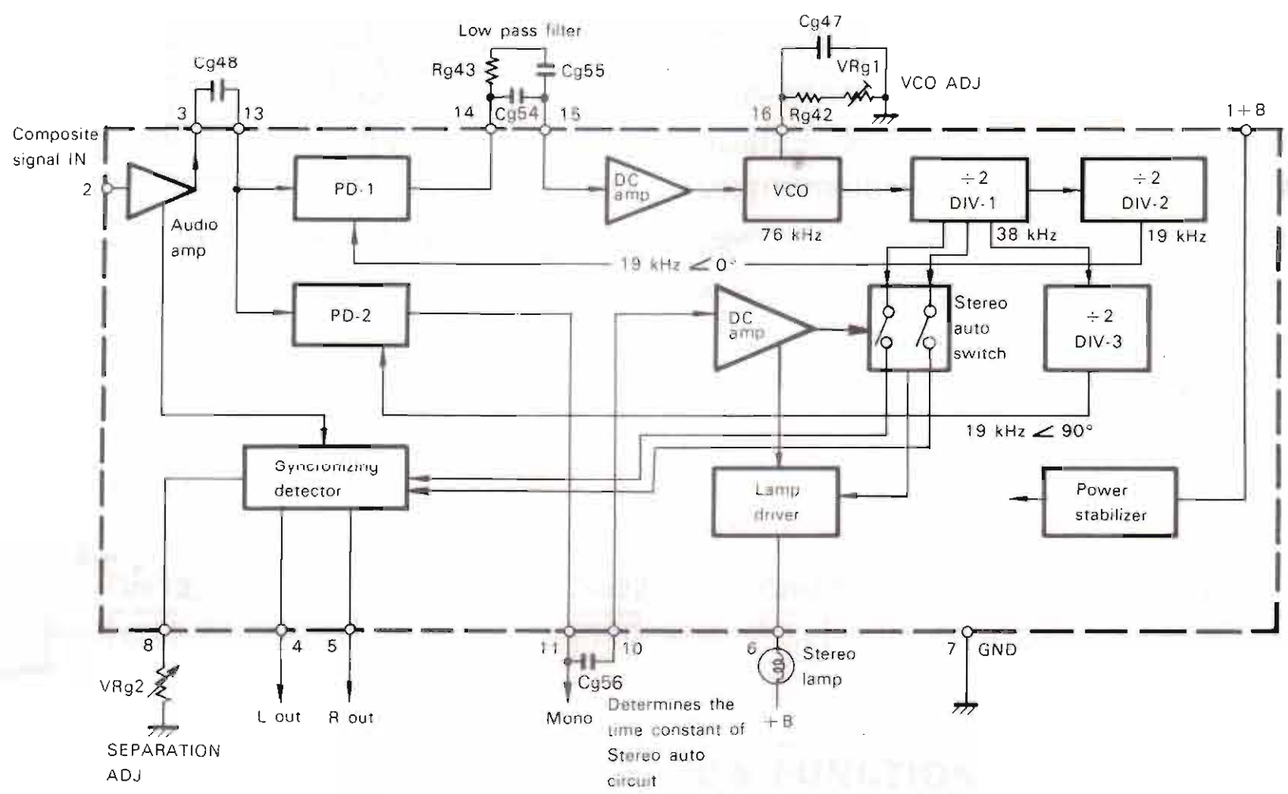

Fig. 4 LA3350 BLOCK DIAGRAM

CIRCUIT DESCRIPTION

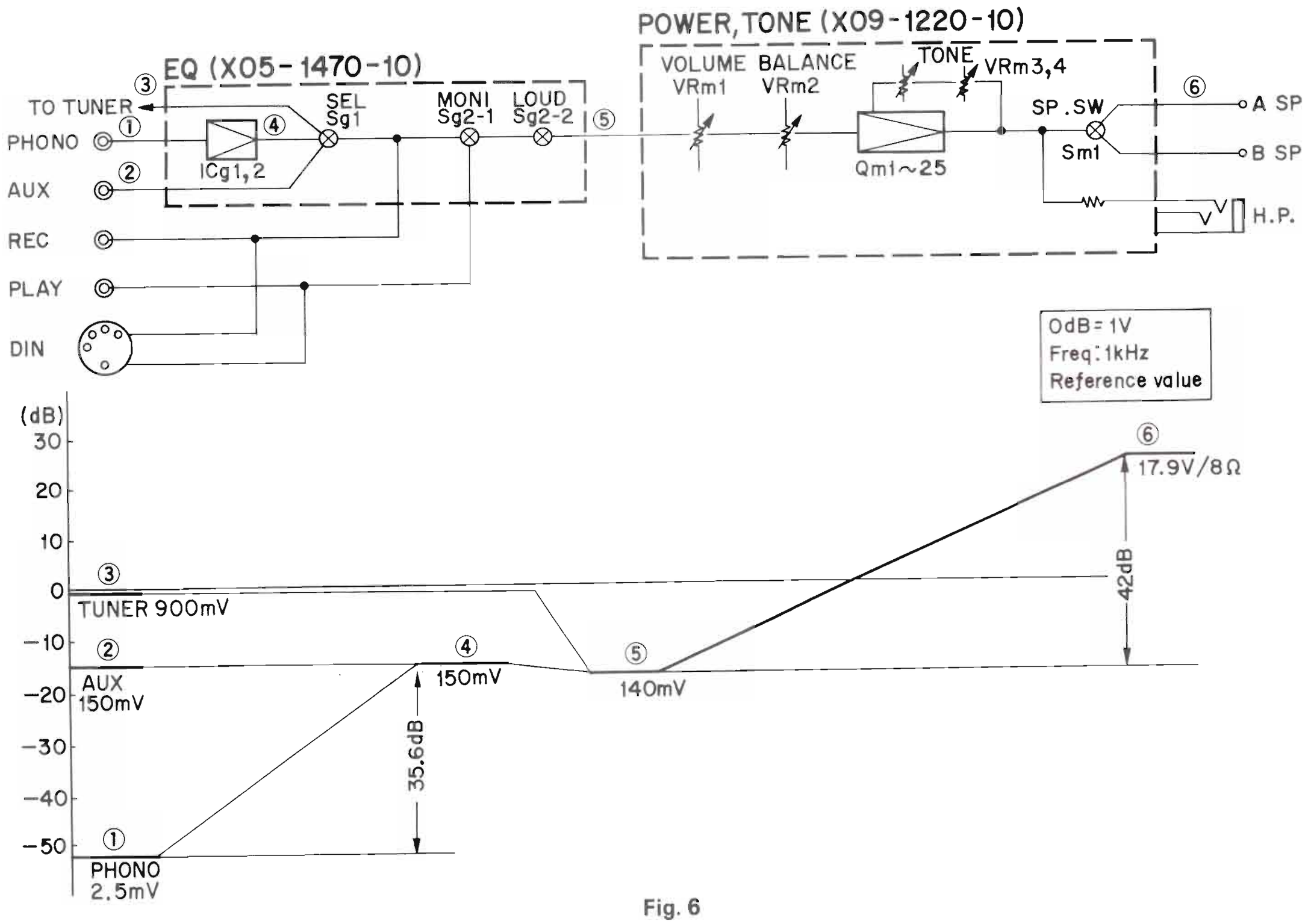

Fig. 6

The block diagram shown above represents the audio section of KR-4070.

The equalizer circuit consisting of TA-7136P(IC) is mounted on the tuner circuit board.

Signals from phono cartridge are fed to Pin 2 of TA-7136P, amplified and delivered as output signals from Pin 6. The output signals are partly applied to the equalizer element (RIAA curve) and fed back to the input of TA-7136P.

The amplified signals are fed to the power amplifier through the selector SW, tape monitor SW, volume control and balance control. The power amplifier comprises a 2-stage transistor differential amplifier and a complementary amplifier with ASO protection circuit that protects the power transistors from overload. An NFB type tone control circuit is included in the NF circuit of the power amplifier.

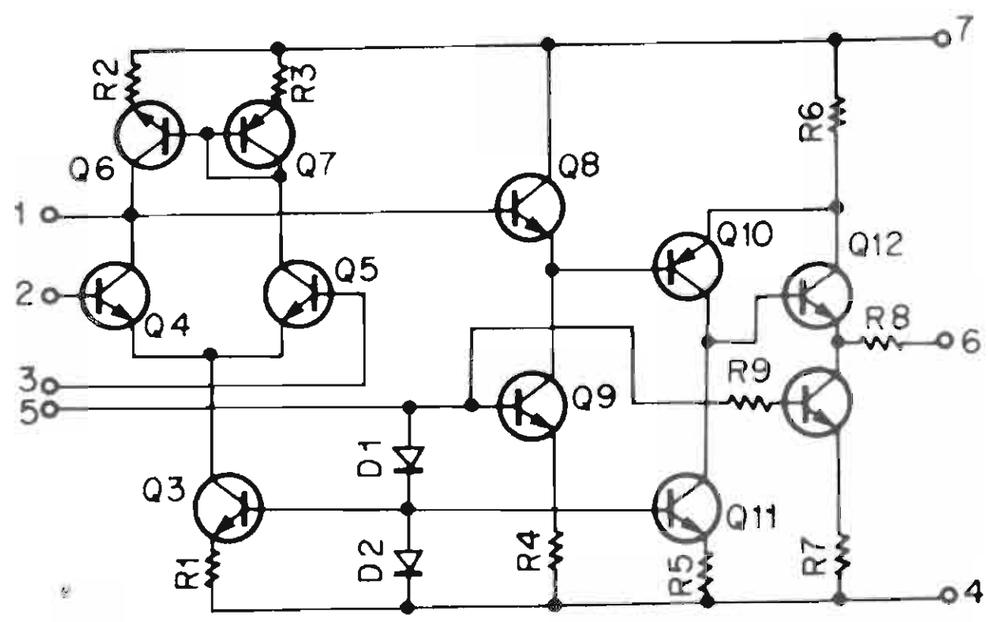

Fig. 7 TA-7136P EQUIVALENT CIRCUIT

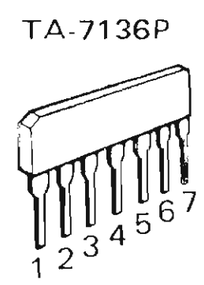

CIRCUIT DESCRIPTION

ASO PROTECTION CIRCUIT

The basic function of the ASO protection circuit is such that it detects an overcurrent flowing into the emitter resistor on the positive side of the power transistor, and leads the positive signal and +Vcc of the differential amplifier to the GND side, thus protecting the power transistor from overload.

The transistor Qm19 is the detecting transistor. If an overcurrent flows, the voltage across the emitter resistor Rm47 is divided by the resistors Rm69 and 71, so that the voltage appears across the base and emitter of Qm19.

When this voltage exceeds 0.6V and Qm19 is ON, the voltage at the base of Qm21 which is connected to the collector of Qm19 via a resistor decreases. Since Qm21 turns to ON, the voltage at the collector of Qm21 reaches +Vcc, and Dm7 connected to the base of Qm22 is reverse biased, Qm22 turns to OFF. This increases the base voltage of Qm24 towards negative and thus Qm24 turns to ON, in turn, the base voltage of Qm23 increases, Qm23 is ON. Since the positive signal and +Vcc of the differential amplifier are connected to the collector of Qm23, no signal is fed to the complementary stage and, hence, the power transistor is protected from overload. (Fig. 11)

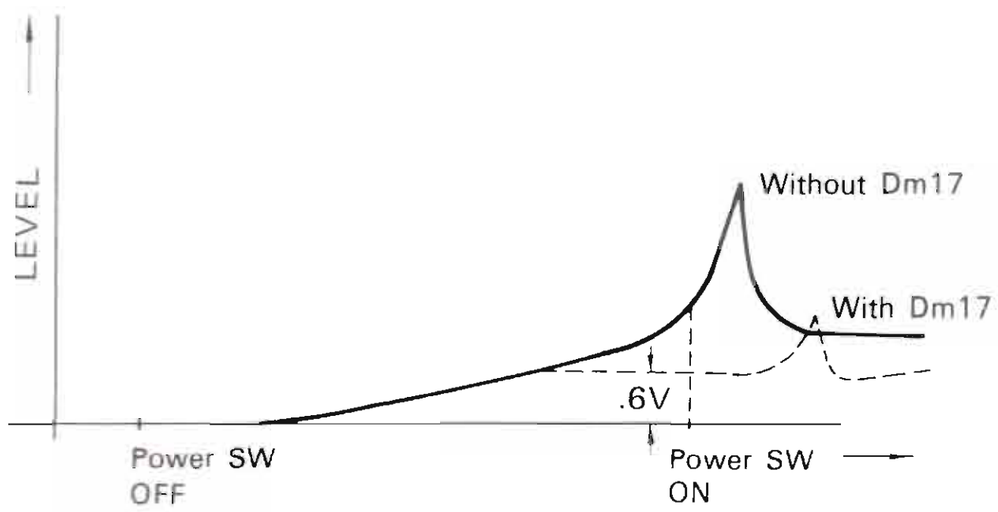

Fig. 8 SHOCK NOISE CURVE

The capacitor Cm33 is charged and discharged repeatedly through Rm73 and Dm8 when AC voltage at the output side turns to positive and negative so that Qm19 is not energized by a large input level. (Fig. 9)

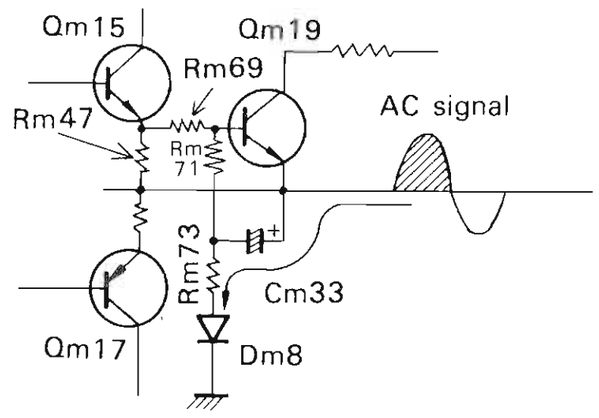

Fig. 9 Cm33 FUNCTION

Cm38 and Rm79 are used to eliminate shock noise which may be generated when the power SW is set to ON. (Fig. 10)

When the power SW is turned to ON, Cm38 is charged gradually. Qm22 remains OFF until Cm38 is fully charged because Dm7 is reverse biased and leads the signal and +Vcc of the differential amplifier to the GND side to eliminate the shock noise. When the power SW is turned to OFF, the voltage +Vcc is discharged gradually. Note that a shock noise will be generated if the power SW is turned ON again before the voltage is fully discharged. However, the discharge time is shortened by the use of Dm17 at the input of the differential amplifier. (Fig. 8)

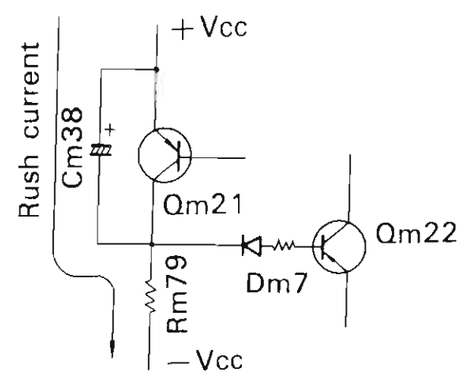

Fig. 10 SHOCK NOISE ELIMINATION CIRCUIT

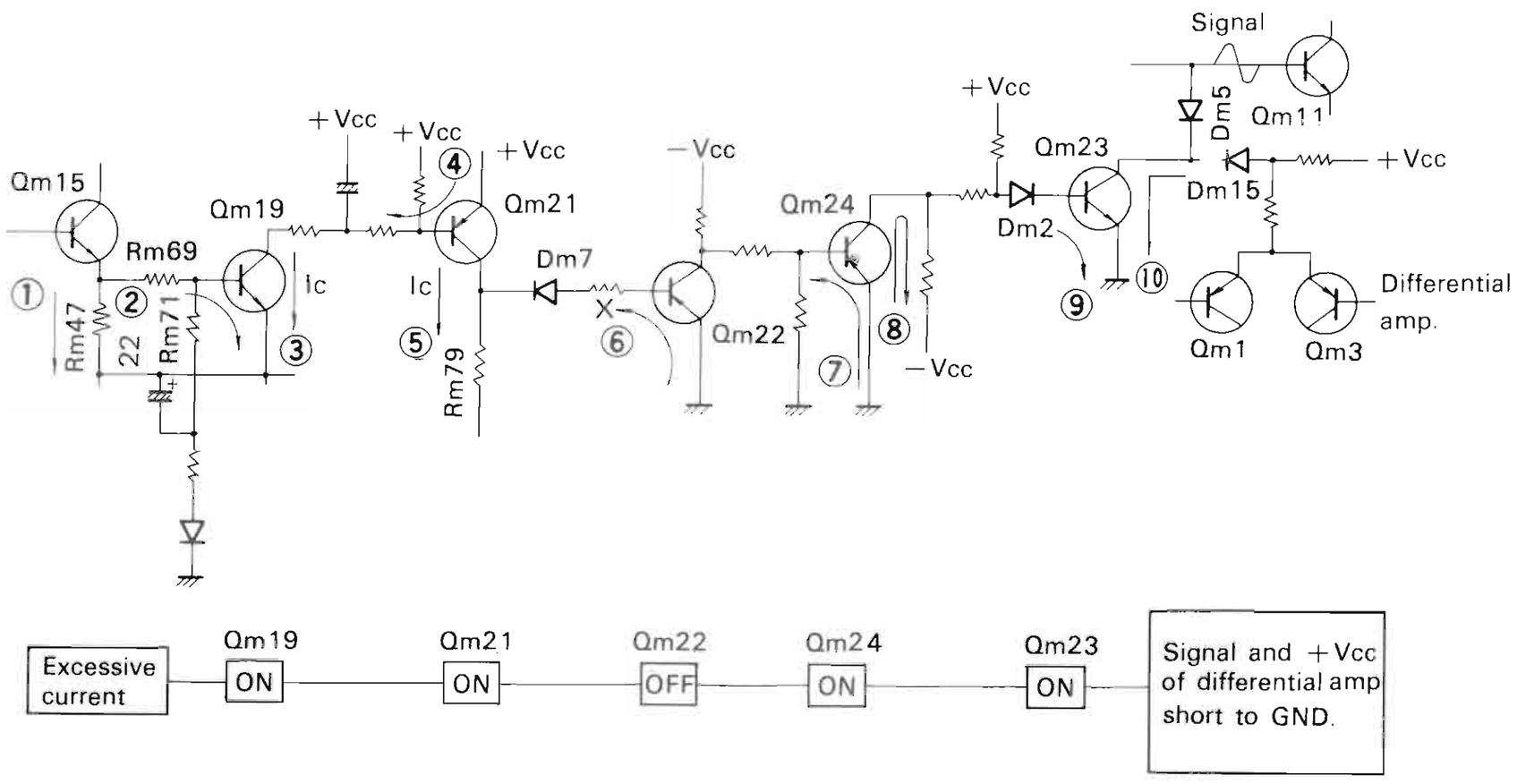

Fig. 11 ASO PROTECTION FUNCTION

☆ : new parts

Ref. No.	U.S.A. (K)	Canada (P)	PX (U)	Australia (X)	Europe (W)	Scandinavia (L)	England (T)	KR-4770 (M_2)	Other Area (M)	Descriptions
—	A01-0320-03	A01-0320-03	—	A01-0320-03	A01-0320-03	A01-0320-03	A01-0320-03	A01-0320-03	A01-0320-03	Case ☆
—	—	—	A03-0224-02	—	—	—	—	—	—	Cabinet ☆
—	A20-1155-02	A20-1155-02	A20-1155-02	A20-1155-02	A20-1155-02	A20-1155-02	A20-1157-02	A20-1185-02	A20-1155-02	Panel ass'y ☆
—	B46-0061-00	B46-0055-10	B46-0051-00	—	—	—	B46-0060-00	—	—	Warranty card
—	—	—	B46-0062-00	—	—	—	—	—	—	Warranty card
—	B50-1630-00	B50-1632-00	B50-1630-00	B50-1630-00	B50-1630-00	B50-1630-00	B50-1631-00	B50-1647-00	B50-1630-00	Instruction manual ☆
—	—	—	B59-0018-00	—	—	—	—	—	—	KENWOOD service stations' list
C1	C90-0145-05	C91-0025-05	C91-0023-05	C91-0023-05	CK45E3D103 MPU	CK45E3D 103MPU	CK45E3D 103MPU	C91-0023-05	C91-0023-05	Capacitor 0.01μF
—	—	—	D32-0082-04	D32-0082-04	D32-0082-04	D32-0082-04	D32-0082-04	D32-0082-04	D32-0082-04	Switch stopper ☆ (Power voltage selector)
—	E08-0225-05	E08-0225-05	E08-0225-05	E08-0225-05	—	—	—	E08-0225-05	E08-0225-05	AC outlet × 2
—	—	—	—	—	E08-0226-05	E08-0226-05	E08-0226-05	—	—	DIN antenna terminal (FM)
—	—	—	—	—	E08-0227-05	E08-0227-05	E08-0227-05	—	—	DIN antenna terminal (AM)
—	—	—	—	E29-0026-05	—	—	E29-0026-05	—	—	GND lug
—	E30-0181-05	E30-0181-05	E30-0545-05	E30-0185-05	E30-0459-05	E30-0292-05	040-0306-05	E30-0459-05	E30-0545-05	Power cord
—	—	—	F09-0044-05	F09-0044-05	F09-0044-05	F09-0044-05	F09-0044-05	F09-0044-05	F09-0044-05	Thermal protector
—	H01-1703-04	H01-1704-04	H01-1706-04	H01-1703-04	H01-1703-04	H01-1703-04	H01-1705-04	H01-1724-04	H01-1703-04	Carton case ☆
—	H10-1488-02	H10-1488-02	H10-1490-02	H10-1488-02	H10-1488-02	H10-1488-02	H10-1488-02	H10-1488-02	H10-1488-02	Right polystyrene foamed fixture ☆
—	H10-1489-02	H10-1489-02	H10-1490-02	H10-1489-02	H10-1489-02	H10-1489-02	H10-1489-02	H10-1489-02	H10-1489-02	Left polystyrene foamed fixture ☆
—	H20-0394-04	H20-0394-04	H20-0394-04	H20-0394-04	H20-0394-04	H20-0394-04	H20-0394-04	H20-0394-04	H20-0416-04	Polyethylene cover
—	J02-0088-05	J02-0089-05	—	J02-0089-05	J02-0089-05	J02-0089-05	J02-0089-05	J02-0089-05	J02-0089-05	Leg × 4
—	J41-0034-05	J41-0034-05	J41-0034-05	J41-0024-15	J41-0033-05	J41-0033-05	J41-0024-15	J41-0033-05	J41-0034-05	Cord bushing
—	L01-1351-05	L01-1351-05	L01-1356-05	L01-1356-05	L01-1356-05	L01-1356-05	L01-1356-05	L01-1356-05	L01-1350-05	Power transformer ☆
—	N08-0125-05	N08-0125-05	—	N08-0125-05	N08-0125-05	N08-0125-05	N08-0125-05	N08-0125-05	N08-0125-05	Dress screw (M4 × 8) × 6
R1	RC05GF2H 225M	RC05GF2H 225M	—	—	—	—	—	—	—	Carbon resistor 2.2MΩ ±20% 1/2W
S1	—	—	S31-2046-05	S31-2046-05	S31-2046-05	S31-2046-05	S31-2046-05	S31-2046-05	S31-2046-05	Slide switch (power voltage selector) ☆
—	X05-1470-10	X05-1470-10	X05-1470-10	X05-1470-61	X05-1470-61	X05-1470-61	X05-1470-61	X05-1470-10	X05-1470-10	Tuner unit ☆
—	X09-1220-10	X09-1221-01	X09-1220-81	X09-1221-81	X09-1220-61	X09-1220-61	X09-1220-61	X09-1220-81	X09-1220-81	Audio unit ☆

PARTS LIST

☆ : new parts

Ref. No.	Parts No.	Description	Re-marks
—	A30-0121-12	Dial back board	☆
—	B01-0112-02	Escutchon (include front glass)	☆
—	B07-0213-04	Ring	☆
—	B08-3012-04	Stereo indicator	☆
—	B20-0400-03	Dial calibrations	☆
—	B21-0017-04	Dial pointer	☆
—	B30-0116-05	Pilot lamp (fuse type, 8V, 300 mA) × 2	
—	B30-0127-05	Pilot lamp (8V, 50 mA, for STEREO)	☆
—	B30-0130-05	Pilot lamp (8V, 300 mA, for METER)	☆
—	B31-0262-05	Meter (one pair)	☆
—	B42-0009-04	Passed sticker	
—	D15-0160-04	Small pulley × 5	
—	D15-0171-13	Dial pulley	
—	D19-0050-14	Board × 2	
—	D20-0133-03	Dial shaft ass'y	☆
—	E31-0097-05	Speaker terminal lead ass'y	☆
—	G01-0045-24	Dial spring	
—	G01-0312-04	Spring × 2	
—	J13-0040-05	Fuse holder × 2	
—	J19-0507-05	Antenna mounting hardware	
—	J19-0511-03	Dial calibrations mounting hardware (L)	☆
—	J19-0512-03	Dial calibrations mounting hardware (R)	☆
—	J90-0084-04	Dial pointer rail	☆
—	K21-0342-04	Knob (TUNING)	☆
—	K23-0280-04	Knob (SELECTOR, VOLUME, SPEAKERS) × 3	☆
—	K23-0281-04	Knob (TONE, BALANCE) × 3	☆
—	K27-0059-14	Knob (pushbutton) × 2	☆
—	T90-0083-05	Bar antenna	
—	T90-0202-05	FM indoor antenna	

TUNER (X05-1470-10)

Ref. No.	Parts No.	Description	Re-marks
		CAPACITOR	
Cg1	CC45SL1H101K	Ceramic 100pF ±10%	
Cg2	CC45SL1H150K	Ceramic 15pF ±10%	
Cg3	CK45F1H103Z	Ceramic 0.01μF +80%−20%	
Cg4	CC45SL1H150K	Ceramic 15pF ±10%	
Cg5	CC45SL1H030D	Ceramic 3pF ±0.5pF	
Cg6	CC45SL1H221K	Ceramic 220pF ±10%	
Cg7,8	CK45F1H103Z	Ceramic 0.01μF +80%−20%	
Cg9	CC45LG1H220J	Ceramic 22pF ±5%	
Cg10	CC45SH1H080D	Ceramic 8pF ±0.5pF	
Cg11	CC45CH1H390K	Ceramic 39pF ±10%	
Cg12	CC45CH1H150K	Ceramic 15pF ±10%	
Cg13	CK45F1H103Z	Ceramic 0.01μF +80%−20%	
Cg14	CC45CH1H020C	Ceramic 2pF ±0.25pF	
Cg15～18	CK45F1H103Z	Ceramic 0.01μF +80%−20%	
Cg19	CS15E0J6R8MNE	Tantalum 6.8μF 6.3WV	
Cg20	CE04W1HR47CC	Electrolytic 0.47μF 50WV	
Cg21	CK45F1H473Z	Ceramic 0.047μF +80%−20%	
Cg22	CC45SL1H101K	Ceramic 100pF ±10%	
Cg23～25	CK45F1H103Z	Ceramic 0.01μF +80%−20%	
Cg26,27	CK45F1H473Z	Ceramic 0.047μF +80%−20%	
Cg28	CC45SL1H180K	Ceramic 18pF ±10%	
Cg29	CQ09FS1H361JYO	Polystyrene 360pF ±5%	
Cg30	C90-0245-05	Ceramic 0.01μF ±20%	
Cg31	CK45B1H102M	Ceramic 0.001μF ±20%	
Cg32	CE04W1E100CC	Electrolytic 10μF 25WV	
Cg33,34	C90-0245-05	Ceramic 0.01μF ±20%	
Cg35	CC45SL1H470K	Ceramic 47pF ±10%	
Cg36	C90-0245-05	Ceramic 0.01μF ±20%	
Cg37	CK45F1H473Z	Ceramic 0.047μF +80%−20%	
Cg38	CE04W1E100CC	Electrolytic 10μF 25WV	
Cg39	CK45B1H102M	Ceramic 0.001μF ±20%	
Cg40	CE04W1H1R0CC	Electrolytic 1μF 50WV	
Cg41,42	C90-0245-05	Ceramic 0.01μF ±20%	
Cg43	CQ93M1H104MMA	Mylar 0.1μF ±20%	
Cg44	CE04W1E100CC	Electrolytic 10μF 25WV	
Cg45	CK45B1H561K	Ceramic 560pF ±10%	
Cg46	CE04AW1H1R0CC	Electrolytic 1μF 50WV	
Cg47	CQ09FS1H152J	Polystyrene 0.0015μF ±5%	
Cg48	CQ93M1H473KMA	Mylar 0.047μF ±10%	
Cg49	CE04W1E101CC	Electrolytic 100μF 25WV	
Cg50	CE04W1E100CC	Electrolytic 10μF 25WV	
Cg51,52	CQ93M1H223JMA	Mylar 0.022μF ±5% (X05-1470-10)	
	CQ93M1H153JMA	Mylar 0.015μF ±5% (X05-1470-61)	
Cg53	CE04W1E100CC	Electrolytic 10μF 25WV	
Cg54	CE04AW1HR22CC	Electrolytic 0.22μF 50WV	
Cg55	CE04AW1HR47CC	Electrolytic 0.47μF 50WV	
Cg56	CE04W1H1R0CC	Electrolytic 1μF 50WV	
Cg57,58	CQ93M1H332JMA	Mylar 0.0033μF ±5%	
Cg59,60	CK45B1H391K	Ceramic 390pF ±10%	
Cg61,62	CE04W1E100CC	Electrolytic 10μF 25WV	
Cg63,64	CQ93M1H222KMA	Mylar 0.0022μF ±10%	
Cg65,66	CE04W1HR47CC	Electrolytic 0.47μF 50WV	
Cg67	CE04W0J101CC	Electrolytic 100μF 6.3WV	
Cg68,69	CC45SL1H470K	Ceramic 47pF ±10%	
Cg70,71	CE04W1A470CC	Electrolytic 47μF 10WV	
Cg72,73	CC45SL1H470K	Ceramic 47pF ±10%	
Cg74,75	CQ93M1H103JMA	Mylar 0.01μF ±5%	
Cg76,77	CQ93M1H272KMA	Mylar 0.0027μF ±10%	
Cg78,79	CC45SL1H100D	Ceramic 10pF ±0.5pF	
Cg80,81	CE04W1E100CC	Electrolytic 10μF 25WV	
Cg82,83	CE04W1E101CC	Electrolytic 100μF 25WV	
Cg84,85	CK45B1H561K	Ceramic 560pF ±10%	
Cg86,87	CQ93M1H273KMA	Mylar 0.027μF ±10%	
Cg88	CE04W1E100CC	Electrolytic 10μF 25WV	
Cg89,90	CE04AW1H3R3MCC	Electrolytic 3.3μF 50WV	
Cg91～93	CK45F1H473Z	Ceramic 0.047μF +80%−20%	
Cg94	C90-0245-02	Ceramic 0.01μF ±20%	
		RESISTOR	
Rg10,11	RD14GY2E101J	Carbon 100Ω ±5% 1/4W	
Rg41	RD14GY2E220J	Carbon 22Ω ±5% 1/4W	
Rg47	RS14GB3A121J	Metal film 120Ω ±5% 1W	
Rg82,83	RD14GY2E221J	Carbon 220Ω ±5% 1/4W	
Rg88	RD14GY2E101J	Carbon 100Ω ±5% 1/4W	

PARTS LIST

☆ : new parts

Ref. No.	Parts No.	Description		Re-marks
	SEMICONDUCTOR			
Qg1	V09-0124-10	FET	2SK61 (GR) or (Y)	☆
Qg2	V03-1923-10	Transistor	2SC1923 (R) or (O)	☆
Qg3	V03-0445-05	Transistor	2SC1342 (B)	
Qg4	V03-1923-10	Transistor	2SC1923 (R) or (O)	☆
Qg5	V03-0270-05	Transistor	2SC945 (Q) or (R)	
Qg6,7	V01-0161-05	Transistor	2SA640 (E) or	
	V01-0190-05		2SA841 (BL)	
ICg1	V30-0133-05	IC	HA1137W or	
	V30-0246-10		AN377	☆
ICg2	V30-0245-10	IC	LA1240 or	☆
	V30-0196-05		HA1197	
ICg3	V30-0244-10	IC	LA3350S-L6	
ICg4,5	V30-0180-05	IC	TA-7136P	
Dg1～5	V11-0076-05	Diode	1S1555 or	
	V11-0271-05		1S2076	
Dg6,7	V11-0051-05	Diode	1N60	
	COIL/TRANS			
Tg1	L31-0361-05	FM-ANT-Coil		
Tg2	L31-0396-05	FM-RF Coil		☆
Tg3	L30-0282-05	FM-IFT		
Tg4	L30-0298-05	FM-IFT		☆
Tg5	L30-0299-05	FM-IFT		☆
Tg6	L32-0205-05	AM-OSC Coil		
Tg7	L30-0284-05	AM-IFT		
Lg1	L40-1091-41	Ferri-inductor (1μH)		
Lg2	L32-0187-05	FM-OSC Coil		
Lg3	L40-1805-62	Ferri-inductor (18μH)		
Lg4	L40-2292-44	Ferri-inductor (2.2μH)		
Lg5	L40-1092-44	Ferri-inductor (1μH)		
Lg6	L40-1022-03	Ferri-inductor (1mH)		
CFg1,2	L72-0034-05	FM-Ceramic filter		
CFg3	L72-0036-05	AM Ceramic filter		
	POTENTIOMETER			
VRg1	R12-2016-05	PC trimmer 5kΩ(B) (VCO)		
VRg2	R12-0047-05	PC trimmer 500Ω(B) (SEPARATION)		
	SWITCH			
Sg1	S01-2046-05	Rotary (SELECTOR)		☆
Sg2	S42-2018-05	Pushbutton		☆
		(MONITOR, LOUDNESS)		
	MISCELLANEOUS			
—	C01-0185-05	Variable capacitor		
CTg1	C05-0055-05	Ceramic trimmer		
—	E29-0088-05	Terminal board		☆
—	E40-0480-05	Pin ass'y (4P)		
—	E40-0580-05	Pin ass'y (5P)		

AUDIO (X09-1220-10)

Ref. No.	Parts No.	Description			Re-marks
	CAPACITOR				
Cm1,2	CE04AW1H3R3MCC	Electrolytic	3.3μF	50WV	
Cm3,4	CC45SL1H470K	Ceramic	47pF	±10%	
Cm5,6	CE04W1E100	Electrolytic	10μF	25WV	
Cm7,8	CC45SL1H050D	Ceramic	5pF	±0.5pF	
Cm9,10	CE04W1A470	Electrolytic	47μF	10WV	
Cm11,12	CC45SL1H100K	Ceramic	10pF	±10%	
Cm13,14	CC45SL1H101K	Ceramic	100pF	±10%	
Cm15,16	CE04W1H470	Electrolytic	47μF	50WV	
Cm17～20	CC45SL1H101K	Ceramic	100pF	±10%	
Cm21,22	CQ93M1H473M	Mylar	0.047μF	±20%	
Cm23,24	CE04BW1H470M	Electrolytic	47μF	50WV	
Cm25,26	CQ93M1H473K	Mylar	0.047μF	±10%	
Cm27～30	CQ93M1H224K	Mylar	0.22μF	±10%	
Cm31,32	CE04AW1H1R0MCC	Electrolytic	1μF	50WV	
Cm33～35	CE04W1E100	Electrolytic	10μF	25WV	
Cm36	CE04W1H221	Electrolytic	220μF	50WV	
Cm37	CE04W2A4R7CC	Electrolytic	4.7μF	100WV	
Cm38	CE04W2A470CC	Electrolytic	47μF	100WV	
Cm39～42	CE04W1E101	Electrolytic	100μF	25WV	
Cm43	CQ93M1H104M	Mylar	0.1μF	±20%	
Cm44	CE04W1E471	Electrolytic	470μF	25WV	
Cm45～48	CQ93M2A104M	Mylar	0.1μF	±20%	
Cm49,50	C90-0358-05 or	Electrolytic	7500μF	50WV	☆
	C90-0359-05	Electrolytic	7500μF	50WV	☆
Cm53	CE04AW1HR47M	Electrolytic	0.47μF	50WV	
	RESISTOR				
Rm5,6	RC05GF2H103K	Carbon	10kΩ	±10%	1/2W
Rm11,12	PD14GY2E221J	Carbon	220Ω	±5%	1/4W
Rm13,14	PD14GY2E101J	Carbon	100Ω	±5%	1/4W
Rm21,22	RC05GF2H222K	Carbon	2.2kΩ	±10%	1/2W
Rm23,24	RC05GF2H682K	Carbon	6.8kΩ	±10%	1/2W
Rm35～38	PD14GY2E100J	Carbon	10Ω	±5%	1/4W
Rm39～42	PD14GY2E181J	Carbon	180Ω	±5%	1/4W
Rm43～46	PD14GY2E4R7J	Carbon	4.7Ω	±5%	1/4W
Rm47～50	R91-0166-05	Cement	0.22Ω	±10%	1W ☆
Rm51,52	RS14GB3A220J	Metal film	22Ω	±5%	1W
Rm53,54	RC05GF2H100K	Carbon	10Ω	±10%	1/2W
Rm55,56	RC05GF2H331J	Carbon	330Ω	±10%	1/2W
Rm88	RC05GF2H472J	Carbon	4.7kΩ	±10%	1/2W
Rm89	PD14GY2E560J	Carbon	56Ω	±5%	1/4W
Rm91,12	PD14GY2E152J	Carbon	1.5kΩ	±5%	1/4W
Rm93	PD14GY2E272J	Carbon	2.7kΩ	±5%	1/4W
	SEMICONDUCTOR				
Qm1～4	V01-0146-05	Transistor	2SA640 (E) or (F) or		
	V01-0192-05		2SA841 (GR) or (BL)		
Qm5～8	V03-0477-05	Transistor	2SC1775 (E) or (F) or		
	V03-1980-10		2SC1980(S) or (T)		
Qm9,10	V03-0466-05	Transistor	2SC1681 (GR) or		
	V03-0309-05		2SC1345 (D)		
Qm11,12	V04-0438-10	Transistor	2SD438MP (E) or (F) or		☆
	V03-0471-05		2SC1735 (D) or (E)		
Qm13,14	V02-0560-10	Transistor	2SB560MP (E) or (F) or		☆
	V01-0197-05		2SA850 (D) or (E)		
Qm15,16	V04-0077-05	Transistor	2SD588		
Qm17,18	V02-0058-05	Transistor	2SB618		
Qm19,20	V03-0491-05	Transistor	2SC1399 (E) or (F) or		

PARTS LIST

☆ : new parts

Ref. No.	Parts No.	Description	Re-marks
	V03-0424-05	2SC1400 (U) or (E) or	
	V03-1980-10	2SC1980 (S) or (T) or	
	V03-1890-10	2SC1890 (E) or (F)	
Qm21	V01-0152-05	Transistor 2SA750 (I), (E) or (F) or	
	V01-0191-05	2SA872 (D) or (E)	
	V01-0893-20	2SA893 (D) or (E)	
Qm22	V01-0085-05	Transistor 2SA733 or	
	V01-0564-10	2SA564A	
Qm23	V03-0297-05	Transistor 2SC945 or	
	V03-0505-05	2SC828A	
Qm24	V01-0085-05	Transistor 2SA733 or	
	V01-0564-10	2SA564A	
Qm25	V03-0344-05	Transistor 2SC1419 (B) or (C) or	
	V04-0330-10	2SD330 (D) or(E) or (F)	
Dm1	V11-0254-05	Zener diode YZ-140 or	
	V11-7100-20	EQA01-14R	
Dm2	V11-0271-05	Diode 1S2076 or	
	V11-0076-05	1S1555	
Dm5,6	V11-0295-05	Diode W06B or	
	V11-0219-05	V06B	
Dm7	V11-0273-05	Diode 1S2076A or	
	V11-0076-05	1S1553	
Dm8,9	V11-0271-05	Diode 1S2076	
	V11-0076-05	1S1555	
Dm10	V11-0254-05	Zener diode YZ-140 or	
	V11-7100-20	EQA01-14R	
Dm11	V11-0295-05	Diode W06B or	
	V11-0219-05	V06B	
Dm12,13	V11-0386-05	Zener diode EQA01-20R or	
	V11-4100-30	WZ-197	
Dm14	V11-2100-20	Diode M4B-3 (S)	☆
Dm15～	V11-0271-05	Diode 1S2076 or	
17	V11-0076-05	Diode 1S1555	
THm1,2	V22-0027-05	Thermistor 5TP-41L	
		COILS	
Lm1,2	L39-0080-15	Coil	
Lm3	L40-1092-03	Ferri-inductor	
Lm4	L40-1011-03	Ferri-inductor	
		POTENTIOMETER	
VRm1	R06-5026-05	Potentiometer 100kΩ(B) × 2 (VOLUME)	☆
VRm2	R01-5019-05	Potentiometer 200kΩ(W) (BALANCE)	☆
VRm3	R06-2009-05	Potentiometer 5kΩ(C) (TREBLE)	☆
VRm4	R06-2010-05	Potentiometer 5kΩ(C) (BASS)	☆
VRm5,6	R12-0047-05	PC trimmer 500Ω(B) (BIAS)	
		SWITCH	
Sm1	S02-1008-05	Rotary (POWER and SPEAKERS) (X09-1220-10) (X09-1221-01)	☆
	S02-1009-05	Rotary (POWER and SPEAKERS) (X09-1220-61)	☆
	S02-1010-05	Rotary (POWER and SPEAKERS) (X09-1220-81)	☆
		MISCELLANEOUS	
—	E11-0060-05	Phone jack	
—	E31-0099-05	Mini connector (4P)	☆
—	E31-0100-05	Mini connector (5P)	☆
—	E40-0680-05	Pin ass'y (6P)	

Ref. No.	Parts No.	Description	Re-marks
Fm1	F05-1021-05	Fuse (1A) (X09-1220-10, X09-1221-01)	
	F06-1021-05	Fuse (1A) (X09-1220-61)	
	F05-1023-05	Fuse (1A) (X09-1220-81)	
Fm2	F05-3021-05	Fuse (3A) (X09-1220-10, X09-1221-01)	
	F05-3122-05	Fuse (3.15A) (X09-1220-61)	
	F05-4022-05	Fuse (4A) (X09-1220-81)	
Fm3	F05-1623-05	Fuse (1.6AT) (X09-1220-61)	
	F05-2023-05	Fuse (2A) (X09-1220-81)	
—	F20-0114-05	Mica plate × 4	
—	J13-0041-05	Fuse clip × 4 (X09-1220-10, X09-1221-01)	
—	J13-0041-05	Fuse clip × 6 (X09-1220-81)	
—	J13-0039-05	Fuse clip × 6 (X09-1220-61)	

TUNER (X05-1470-10)

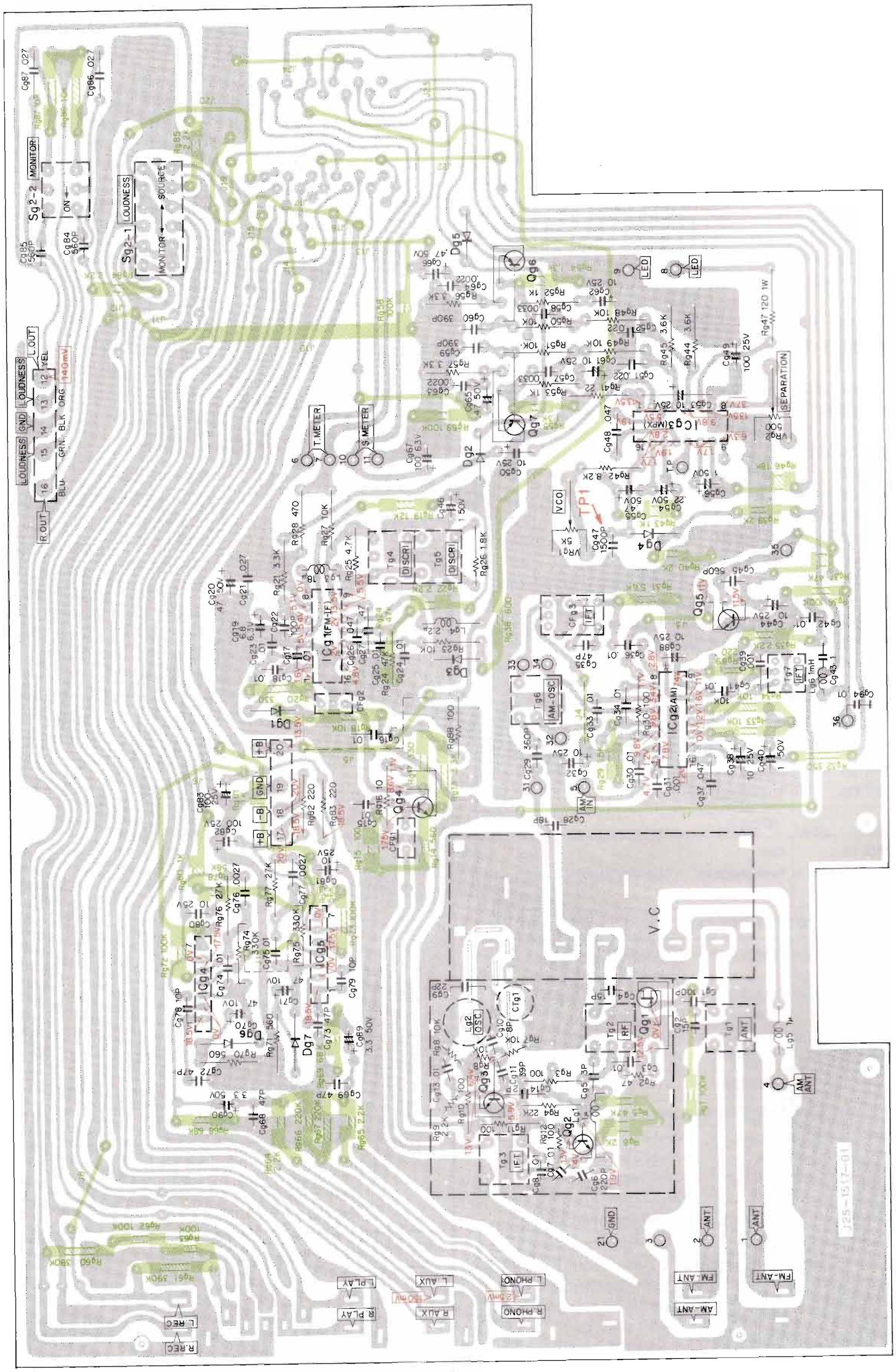

Qg1: 2SK61 (GR) or (Y), Qg2,4: 2SC1923 (R) or (O), Qg3: 2SC1342 (B), Qg5: 2SC945 (Q) or (R), Qg6,7: 2SA640 (E) or 2SA841 (BL), ICg1: HA1137W or AN377, ICg2: LA1240 or HA1197, ICg3: LA3350S-L6, ICg4, 5: TA-7136P, Dg1～5: 1S1555 or 1S2076, Dg6,7: 1N60

NOTE: The value of Cg51 and 52 are modified in X05-1470-61 unit.
DC voltages indicated here are measured with 20 kΩ/V meter.

NOTE: The value of Fm1～3 are modified in each unit, X09-1220-61, -81 and X09-1221-01.

2SA564
2SA640
2SA733
2SA750
2SA872
2SA893
2SB560

2SC828
2SC945
2SC1399
2SC1400
2SC1775
2SC1890
2SC1923
2SC1980
2SD438

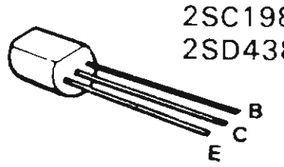

2SC458
2SC1342
2SC1345

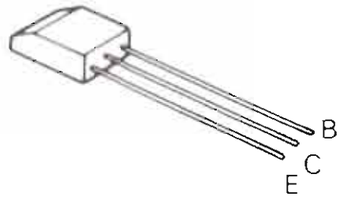

2SC1419
2SD330

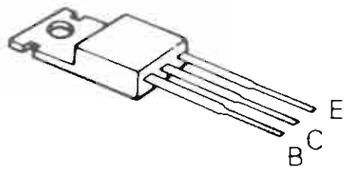

2SA841
2SC785R
2SC1000
2SC1681

2SA850
2SC1735

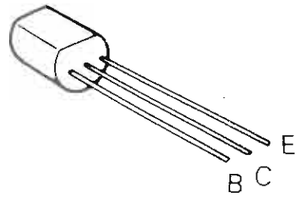

2SB618
2SD588

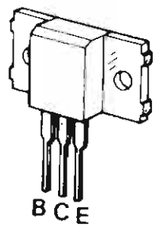

2SK61

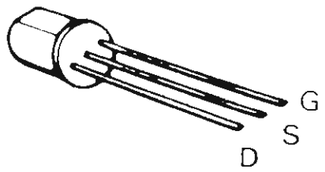

2SA673A

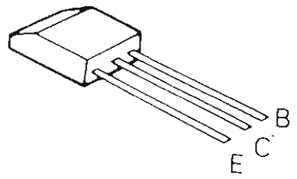

TA7136P

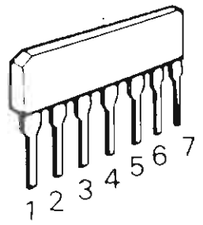

Audio Signal (Reference value).
DC voltages indicated here are measured with 20 kΩ/V meter.

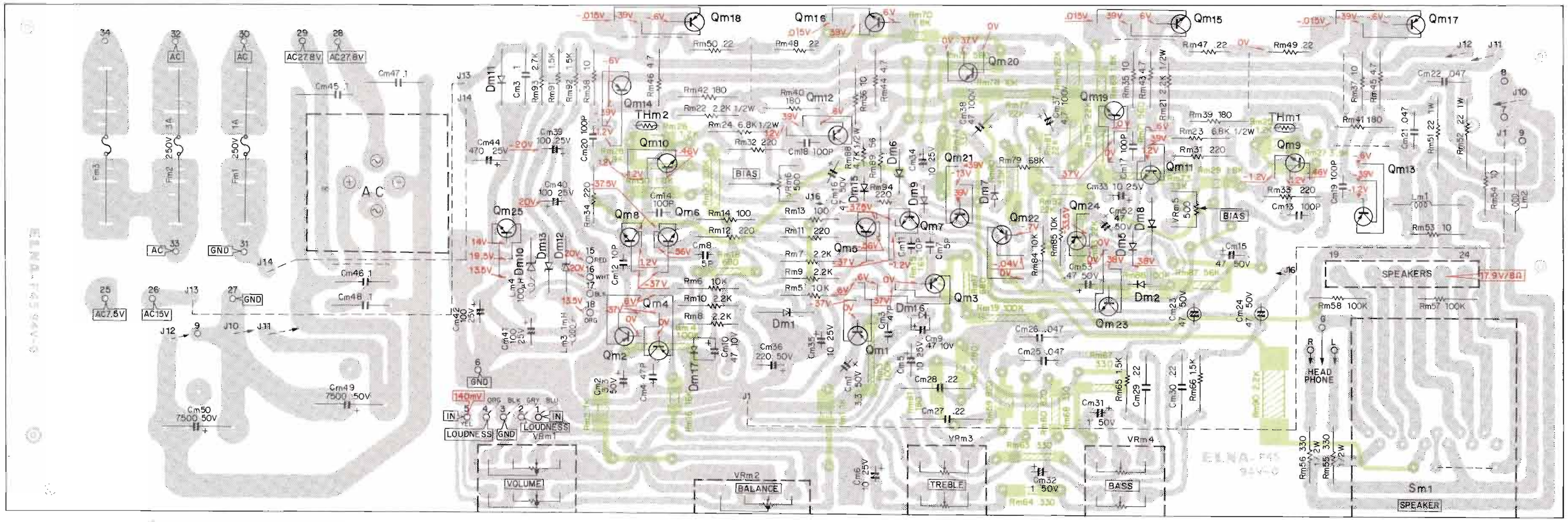

Qm1～4: 2SA640 (E) or (F) or 2SA841 (GR) or (BL), Qm5～8: 2SC1775 (E) or (F) or 2SC1980 (S) or (T), Qm9,10: 2SC1681 (GR) or 2SC1345 (D), Qm11,12: 2SD438MP (E) or (F) or 2SC1735 (D) or (E), Qm13,14: 2SB560MP (E) or (F) or 2SA850 (D) or (E), Qm15,16: 2SD588, Qm17,18: 2SB618, Qm19,20: 2SC1399 (E) or (F) or 2SC1400 (E) or (U) or 2SC1980 (S) or (T) or 2SC1890, (E) or (F), Qm21: 2SA750(1) (E) or (F) or 2SA872 (D) or (E) or 2SA893 (D) or (E), Qm22, 24: 2SA733 or 2SA564A, Qm23: 2SC945 or 2SC828A, Qm25: 2SC1419, (B) or (C) or 2SD330 (D) or (E) or (F), THm1,2: 5TP-41L, Dm1,10: YZ-140 or EQA01-14R, Dm2,8,9,15～17, 1S2076 or 1S1555, Dm5,6,11: WO-6B or V06B, Dm7: 1S2076A or 1S1553, Dm12,13: EQA01-20R or WZ-197, Dm14: M48-3 (S)

SEMICONDUCTOR SUBSTITUTIONS

SEMICONDUCTOR NAME	SUBSTITUTIONS
TUNER (X05-1470-10)	
2SA640(E)	2SA841(BL)
2SC945(Q) or (R)	2SC458(C)
2SC1342(B)	2SC785R
2SC1923(R) or (O)	—
2SK61(GR) or (Y)	—
HA1137W	AN377
LA1240	HA1197
LA3350S-L6	—
TA7136P	—
TONE (X09-1220-10)	
2SA640(E) or (F)	2SA841(GR) or (BL)
2SA733	2SA564A, 2SA673, 2SA673A, 2SA640
2SA750(I), (E) or (F)	2SA872(D) or (E) or 2SA893(D) or (E)
2SB560MP(E) or (F)	2SA850(D) or (E)
2SB618	—
2SC945	2SC828A, 2SC1000, 2SC1345
2SC1399(E) or (F)	2SC1400(U) or (E) or 2SC1980(S) or (T) or 2SC1890(E) or (F)
2SC1419(B) or (C)	2SD330(D), (E) or (F)
2SC1681(GR)	2SC1345(D)
2SC1775(E) or (F)	2SC1980(S) or (T)
2SD438MP(E) or (F)	2SC1735(D) or (E)
2SD588	—

ABSOLUTE MAX. RATINGS

TRANSISTOR	V_{CBO}	V_{EBO}	V_{CEO}	I_C	P_C	Tj	Tstg	f_T
2SB560MP	−100V	−5V	−80V	−0.7A	750 mW	125°C	−40～+125°C	—
2SC1923	40V	4V	30V	20 mA	100 mW	125°C	−55～+125°C	—
2SD438MP	100V	50V	80V	0.7A	750 mW	125°C	−40～+125°C	—
DIODE	V_{RM}	V_R	I_F	I_O	Isurge	P	Tj	Tstg
M4B-3(S)	—	200V	—	3A	90A	—	−40～+135°C	−40～+135°C

2SA564
2SA640
2SA733
2SA750
2SA872
2SA893
2SB560

2SC828
2SC945
2SC1399
2SC1400
2SC1775
2SC1890
2SC1923
2SC1980
2SD438

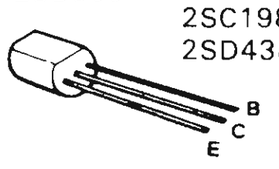

2SC458
2SC1342
2SC1345

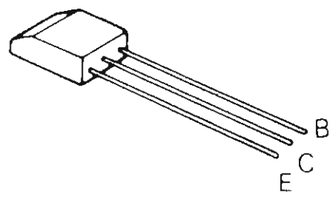

2SA673A

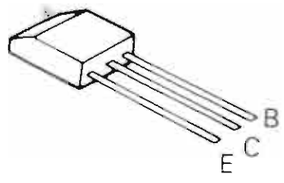

2SA841
2SC785R
2SC1000
2SC1681

2SK61

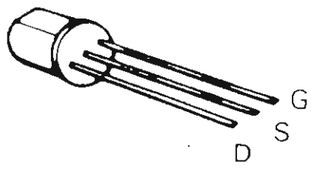

2SB618
2SD588

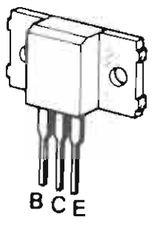

2SC1419
2SD330

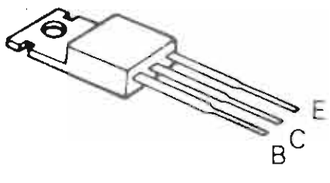

2SA850
2SC1735

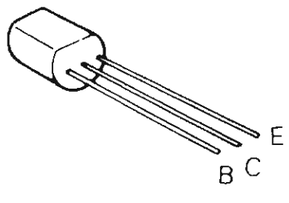

TA7136P

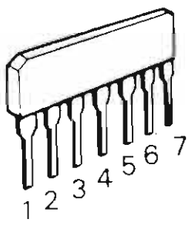

ADJUSTMENT

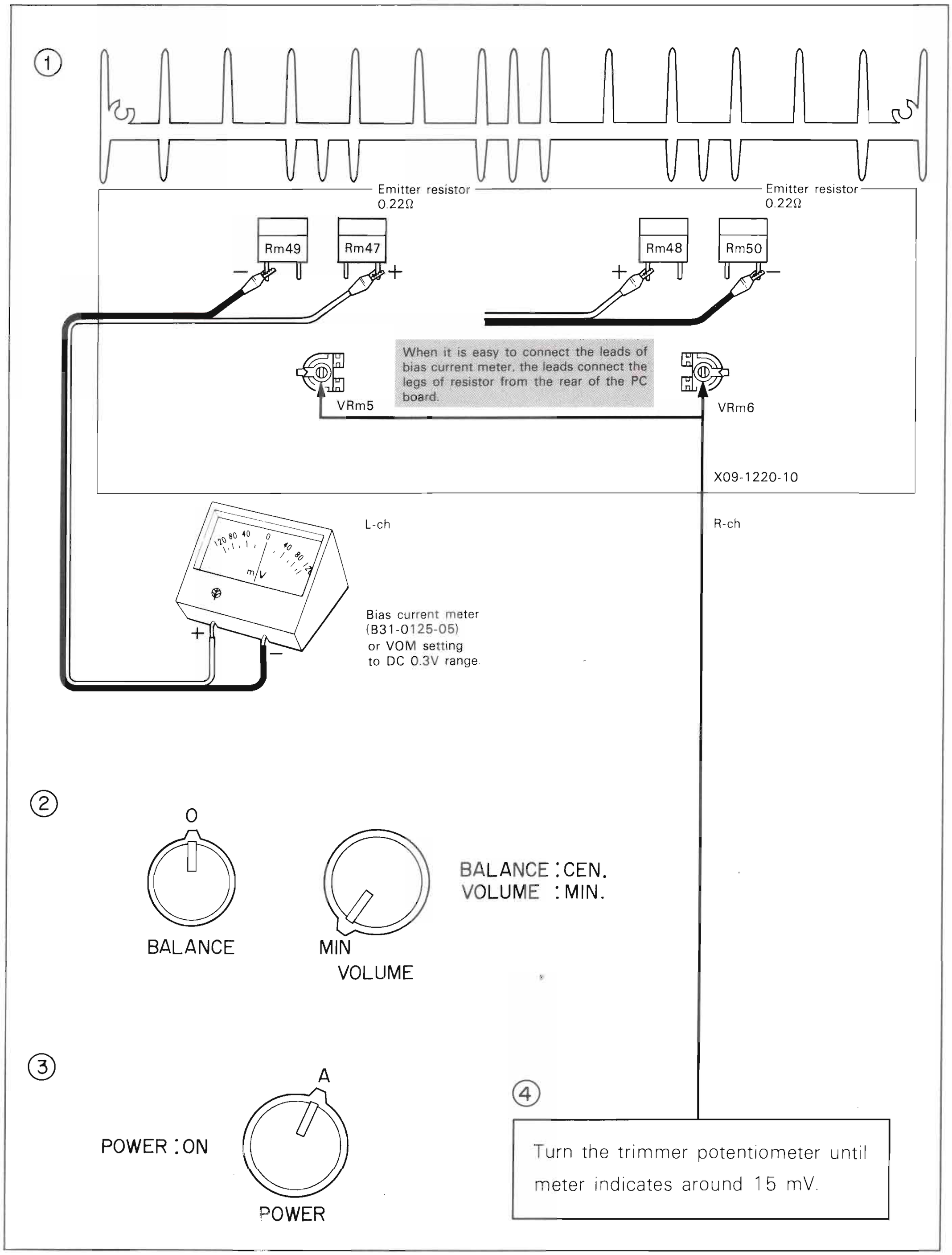
1
Emitter resistor
0.22Ω
Emitter resistor
0.22Ω
Rm49
Rm47
Rm48
Rm50
When it is easy to connect the leads of bias current meter, the leads connect the legs of resistor from the rear of the PC board.
VRm5
VRm6
X09-1220-10
L-ch
R-ch
Bias current meter
(B31-0125-05)
or VOM setting
to DC 0.3V range.
2
O
BALANCE
MIN
VOLUME
BALANCE : CEN.
VOLUME : MIN.
3
A
POWER : ON
POWER
4
Turn the trimmer potentiometer until meter indicates around 15 mV.

ADJUSTMENT

NOTE:

* RF-SG is set to the lowest response possible on oscilloscope.
* The output level of r.f. generator is attenuated by using the dummy antenna.
* As the value of matching loss is varied with connection and kinds of test equipments, confirm the value when using the dummy antenna.
* Repeat TRACKING adjustment several times and confirm the reception of broadcasting.
* Test point is shown in the schematic diagram.

NO.	ALIGN	TEST EQUIPMENTS		RECEIVER SETTING	OUTPUT INDICATOR	ADJUSTMENT POINTS	REMARKS
		CONNECTION	SETTING				
FM SECTION							
1	IF	A and B	95 MHz 1 kHz (Mod) 75 kHz (Dev)	95 MHz	SSVM and scope to REC jack	Tg3	Maximum deflection
2		.....	.....	.....	T meter	Tg4	Make the pointer position in the center of the meter
3		A and B	95 MHz 1 kHz (Mod) 75 kHz (Dev)	95 MHz	SSVM, scope and distortion meter to REC jack (L)	Tg5	Maximum deflection and minimum distortion
4	OUTPUT	—ditto—	95 MHz 1 kHz (Mod) 75 kHz (Dev) 60 dB (input)	—ditto—	—ditto—	.....	Confirm output voltage is 900 mV
5	TRACKING	—ditto—	90 MHz 1 kHz (Mod) 75 kHz (Dev)	90 MHz	—ditto—	Lg2, Tg1, 2	Maximum deflection
6			106 MHz 1 kHz (Mod) 75 kHz (Dev)	106 MHz		CTg1 ~ 3	
7	VCO	A	95 MHz 0 (Dev) 60 dB (Input)	95 MHz	Freq. counter via 20~30 dB amp or SSVM to TP1 F	VRg1	Counter indicates 76 kHz
8	SEPARATION	B and C	95 MHz 1 kHz (Mod) 68.25 kHz (Dev) L or R (Select) 60 dB (Imput)	—ditto—	SSVM, scope and distortion meter to REC jack (L)	VRg2	Minimum crosstalk (Maximum separation)
9	DISTORTION	B and C	95 MHz 1 kHz (Mod) 68.25 kHz (Dev) L (Select) 60 dB (Input)	—ditto—	SSVM, scope and distortion meter to REC jack (L)	Tg3	Minimum distortion
AM SECTION							
1	IF	B and D	1,000 kHz 400 Hz, 30% (Mod) 100 dB	1,000 kHz	SSVM and scope to REC jack (L)	CFg3,	Maximum deflection
2	TRACKING	—ditto—	600 kHz 400 Hz, 30% (Mod) 100 dB	600 kHz	—ditto—	Tg6 Bar antenna	—ditto—
3			1,400 kHz 400 Hz, 30% (Mod)	1,400 kHz		CTg4, 5	
AUDIO SECTION							
1	BIAS*	.....	.....	VOLUME is its min.	DC volt meter or BIAS current meter (B31-0125-05)	VRm5, 6	Meter indicates 15 mV E

*Refer to page 19.

ADJUSTMENT

TEST EQUIPMENTS AND ITS SPECIFICATIONS

AUDIO SIGNAL GENERATOR (AG)
Ranges: 5Hz ~ 500 kHz
Waveform: Sine wave
Output: 10V r.m.s.
Distortion: 0.01% or less

SOLID STATE VOLT METER (SSMV)
Ranges: 0.3 mV ~ 100V (full scale)
Frequency response: 5 Hz ~ 500 kHz
Impedance: 1M-ohms or more

STANDARD SIGNAL GENERATOR (RF-SG)
Ranges: 90 MHz ~ 108 MHz
Modulation frequency: 1 kHz, 400 Hz or external input (input level 2V or less)
Deviation: 0 ~ 150 kHz
Output: 100 mV or more
S/N: 85 dB or more
Distortion (internal): 0.5% or less

OSCILLOSCOPE (SCOPE)
Ranges: DC ~ 10 MHz
Sensitivity: 20 mV/cm
Impedance: 1M-ohms or more

MULTIPLEX SIGNAL GENERATOR (MPX-SG)
Modulation frequency: 1 kHz or external input (input level: 5V or less)
Separation: 60 dB or more
S/N: 85 dB or more

FREQUENCY COUNTER (COUNTER)
Frequency response: 10 Hz ~ 1 MHz
Sensitivity: 50 mV or more
Impedance: 1M-ohms or more

DISTORTION METER
Ranges: 0.1% ~ 0.03% (full scale)
Sensitivity: 100 mV or more

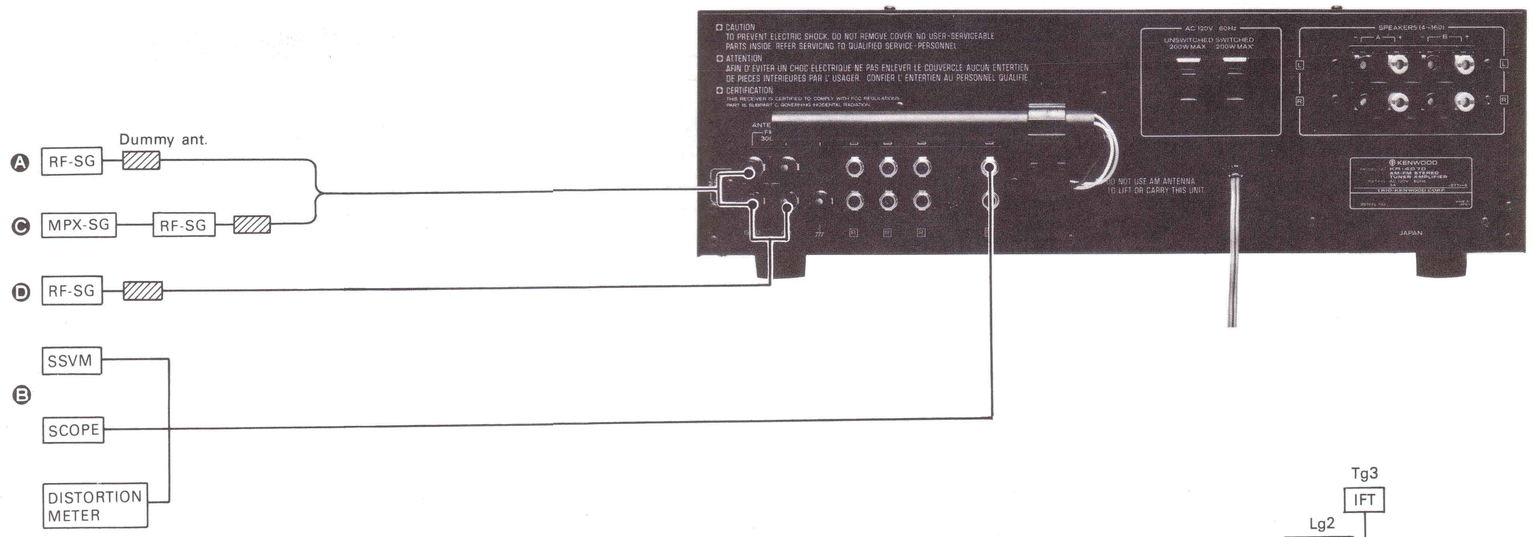

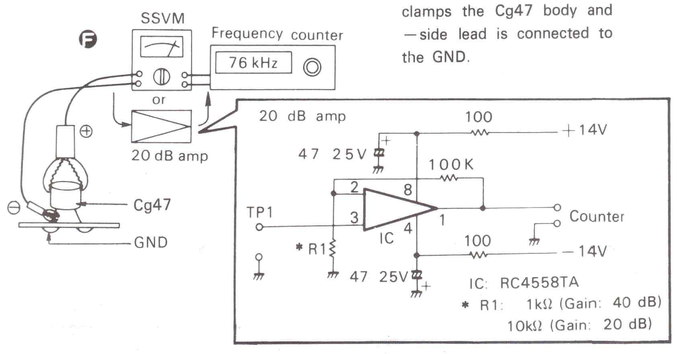

NOTE:
SSVM's test lead (+side) clamps the Cg47 body and −side lead is connected to the GND.

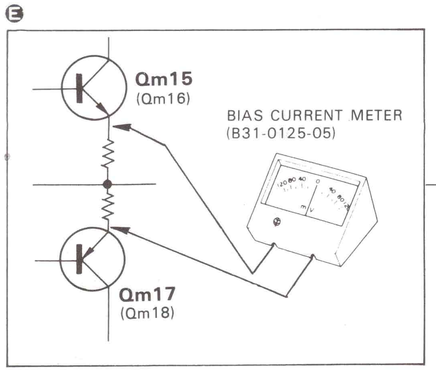

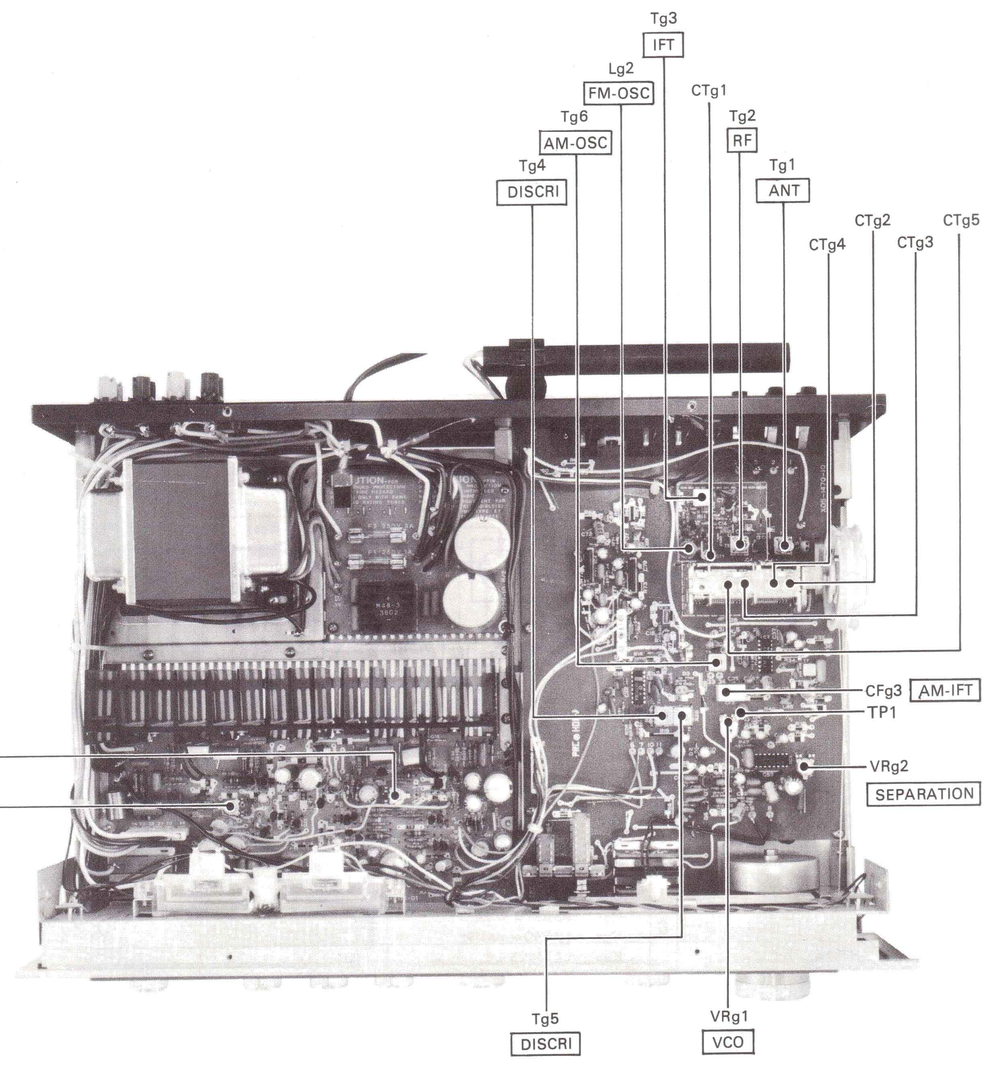

SCHEMATIC DIAGRAM

2SA564 2SC828 2SB618
2SA640 2SC945 2SD588
2SA733 2SC1399
2SA750 2SC1400
2SA872 2SC1775
2SA893 2SC1890
2SB560 2SC1923
2SC1980
2SD438

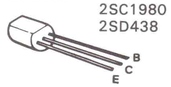

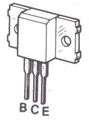

2SA841
2SC785R
2SC1000
2SC1681

2SK61

TA7136P

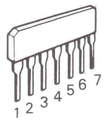

2SC1419
2SD330

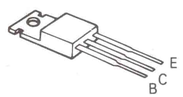

2SA850
2SC1735

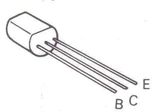

2SC458
2SC1342
2SC1345

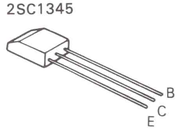

2SA673A

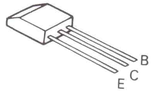

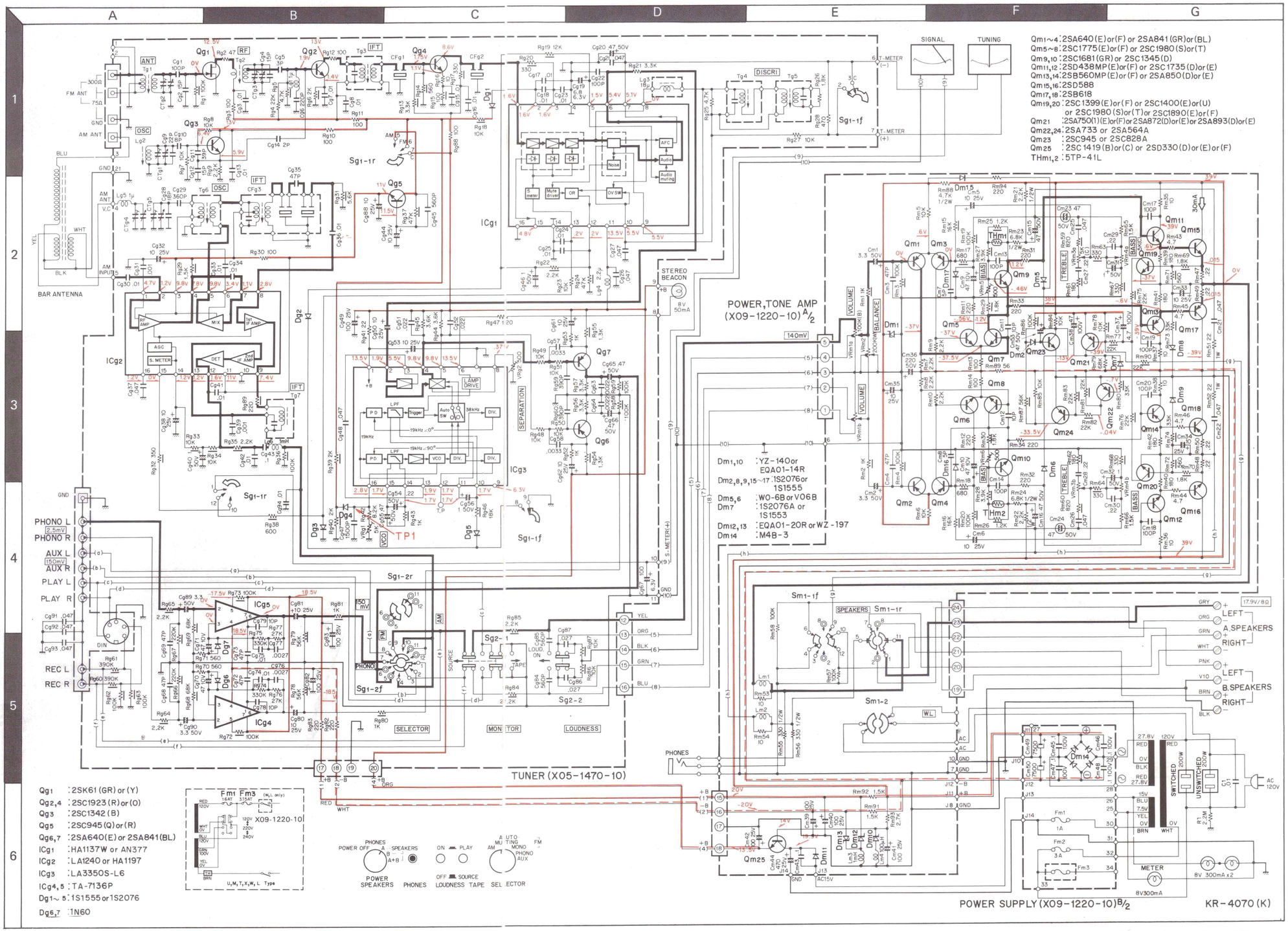

Note: Resistor values are in ohms. K = 1000 ohms, M = 1000k ohms
Capacitor values are in μF unless specified, P = pF = $\mu F \times 10^{-6}$
DC voltage are measure with 20kΩ/V meter under no signal.

SPECIFICATIONS

AMPLIFIER SECTION

Power Output

40 watts per* channel minimum RMS at 8 ohms, from 20 Hz to 20,000 Hz with no more than 0.1% total harmonic distortion.

Both Channels Drive:	40+40 watts 8 ohms at 1,000 Hz 47+47 watts 4 ohms at 1,000 Hz
Dynamic Power Output:	190 watts 4 ohms
Total Harmonic Distortion:	0.1% at rated power into 8 ohms 0.05% at 1 watt into 8 ohms
Intermodulation Distortion: (60 Hz : 7 kHz = 4 : 1)	0.1% at rated power into 8 ohms 0.05% at 1 watt into 8 ohms
Power Bandwidth:	10 Hz to 40,000 Hz
Damping Factor:	40 at 8 ohms
Speaker Impedance:	Accept 4 ohms to 16 ohms
Input Sensitivity/Impedance/Signal to Noise Ratio (IHF A Curve):	
Phono:	2.5 mV/50k ohms/73 dB
AUX:	150 mV/45k ohms/95 dB
Tape:	150 mV/45k ohms/95 dB
Maximum Input Level for Phono:	190 mV (rms), T.H.D. 0.1% at 1,000 Hz
Output Level/Impedance:	
Tape REC (Pin):	150 mV/100 ohms
(DIN):	30 mV/80k ohms
Frequency Response:	
Phono:	RIAA standard curve +0.3 dB, −0.3 dB
AUX and Tape:	15 Hz to 70,000 Hz +0dB, −1.0 dB
Tone Control:	
Bass:	±8 dB at 100 Hz
Treble:	±8 dB at 10,000 Hz
Loudness Control (−30 dB):	+9 dB at 100 Hz +5 dB at 10,000 Hz

FM TUNER SECTION (IHF)

Usable Sensitivity:	10.8 dBf (1.9 μV)
50 dB Quieting Sensitivity:	
(Mono):	15 dBf (3.1 μV)
(Stereo):	37.2 dBf (40 μV)
Signal to Noise Ratio at 65 dBf:	
(Mono):	72 dB
(Stereo):	67 dB
T.H. Distortion at 65 dBf:	
(Mono):	0.15%
(Stereo):	0.25%
Frequency Response:	20 to 15,000 Hz +0.5 dB, −2 dB
Capture Ratio:	1.0 dB
Alternate Channel Selectivity:	60 dB
Spurious Response Ratio:	75 dB
Image Response Ratio:	45 dB
IF Response Ratio (Balanced):	95 dB
AM Suppression Ratio:	53 dB
Stereo Separation:	43 dB at 1,000 Hz 35 dB at 50 to 10,000 Hz
Sub Carrier Product Ratio:	40 dB
Antenna Impedance:	300 ohms balanced and 75 ohms unbalanced
FM Frequency Range:	88 MHz to 108 MHz

AM TUNER SECTION

Usable Sensitivity:	16 μV
Signal to Noise Ratio:	50 dB
Image Rejection:	50 dB
Selectivity:	34 dB

GENERAL

Power Consumption:	300 watts at full power
A.C. Outlet:	Switched 1, Unswitched 1 (except W, L, T type)
Dimensions:	W 18-7/16″ (468 mm) H 5-7/8″ (149 mm) D 15-7/16″ (392 mm)
Weight (Net):	20.7 lbs (9.4 kg)

*Measured pursuant to Federal Trade Commission's Trade Regulation rule in the U.S.A. on Power Output Claims for Amplifier.

Note: Kenwood follows a policy of continuous advancements in development. For this reason specifications may be changed without notice.

KENWOOD ELECTRONICS, INC.

■ 15777 SOUTH BROADWAY, GARDENA, CALIFORNIA 90248 U.S.A.
■ 72-02 51ST AVENUE, WOODSIDE. N.Y. 11377 U.S.A.

TRIO-KENWOOD ELECTRONICS N.V.

■ LEUVENSESTEENWEG 184, B-1930 ZAVENTEM, BELGIUM.

TRIO-KENWOOD ELECTRONICS GmbH.

■ 6056 HEUSENSTAMM, RUDOLF-BRAAS-STR. 20, WEST GERMANY.

TRIO-KENWOOD FRANCE S.A.

■ 15, RUE PAUL BERT, 94200 IVRY-SUR-SEINE, PARIS, FRANCE.

TRIO-KENWOOD CORPORATION

■ 3-6-17 AOBADAI, MEGURO-KU, TOKYO, JAPAN.

© 1977-4 PRINTED IN JAPAN B51-0440-00 (G) 3,420